Dart Aerospace Ltd.

Date: Wednesday, 09/01/2008 7:16:01 AM
User: Linda Lacelle

Process Sheet

Customer	: CC-DAR01 Dart Aerospace Ltd.	**Drawing Name**	: D205-765-011
Job Number	: 36673		
Estimate Number	: 10804		
P.O. Number	:	**Part Number**	: D205765011
This Issue	: 09/01/2008 **S.O. No.** :	**Drawing Number**	: PRELIM ISSUE/-U/R
Prsht Rev.	: NC	**Project Number**	: CERTIFICATE OF
First Issue	: / / **Type** : SMALL /MED FAB	**Drawing Revision**	: CONFORMITY ONLY. UE 08.01.09
Previous Run	: 00015	**Material**	:
Written By	:	**Due Date**	: 15/01/2008 **Qty:** 1 **Um:** Each
Checked & Approved By	:		
Comment	:		

Additional Product

POSITIVE RECALL

Job Number:

Seq. #:	Machine Or Operation:	Description :
1.0	D2127251907	TUNNEL ASSEMBLY
	Comment: Qty.: 1.0000 Each(s)/Unit Total : 1.0000 Each(s) ***FOR LABOUR COSTS ONLY*** 36667	
2.0	D3648041	TUNNEL ASSEMBLY
	Comment: Qty.: 1.0000 Each(s)/Unit Total : 1.0000 Each(s) 35973 TUNNEL ASSEMBLY	
3.0	D36821	GASKET
	Comment: Qty.: 1.0000 Each(s)/Unit Total : 1.0000 Each(s) 35974 GASKET	
4.0	D36541	DOUBLER
	Comment: Qty.: 1.0000 Each(s)/Unit Total : 1.0000 Each(s) 35899 DOUBLER	
5.0	SMALL FAB 1	SMALL & MEDIUM FAB RESOURCE 1
	Comment: SMALL & MEDIUM FAB RESOURCE 1 08.01.09	
6.0	QC5	INSPECT WORK TO CURRENT STEP
	Comment: INSPECT WORK TO CURRENT STEP UE 08.01.09	

Form: rprocess

Date: Wednesday, 09/01/2008 7:16:01 AM
User: Linda Lacelle

Process Sheet

Customer: CC-DAR01 Dart Aerospace Ltd.

Drawing Name: D205-765-011

Job Number: 36673

Part Number: D205765011

Job Number:

Seq. #:	Machine Or Operation:	Description :
7.0	PACKAGING 1	PACKAGING RESOURCE #1

Comment: PACKAGING RESOURCE #1

8.0	QC21	FINAL INSPECTION/W/O RELEASE

Comment: FINAL INSPECTION/W/O RELEASE

D 08/01/09

Job Completion

U 08.01.09

POSITIVE RECALL
EFFECTIVE D 8.01.09 AUTH U
RELEASED _____ DATE _____

Form: rprocess

DART AEROSPACE LTD
1270 Aberdeen Street
Hawkesbury, ON, K6A 1K7
CANADA

Tel: 613 632 5200
Fax: 613 632 1185

Email: heli@dartaero.com
Web Site: www.dartaero.com

CERTIFICATE OF CONFORMANCE

Part no:	Description:	Drawing:	Quantity:	Batch
D205-765-011	Drive Shaft Tunnel Kit	IIN-D205-765 Rev. A	One	36673

The above kit contains the following components:

Part no:	Description:	Drawing:	Quantity:	Batch:
D3648-041	Drive Shaft Tunnel	D3648 Rev. A	One	35973
D3654-1	Doubler	D3654 Rev. A	One	35899
D3682-1	Gasket	D3682 Rev. A	One	35974

FOR THE THREE COMPONENTS LISTED ABOVE:
ALL MATERIALS AND PARTS HAVE BEEN INSPECTED AND COMPLY WITH THE ASSOCIATED DRAWINGS LISTED ABOVE.

DATE: 8/Jan/2008

BY: Susanne Sheldon, eng
APPROVED QA SIGNATORY

Leanne Elsliger, P. Eng
DESIGN ENGINEER

L Lacelle

From: Richard Smith [rsmith@eaglecopters.com]
Sent: January 8, 2008 4:34 PM
To: 'Leanne Elsliger'
Cc: 'L Lacelle'; dcrowston@eaglecopters.com; bbeckett@dartaero.com
Subject: RE: Drive shaft tunnel

Leanne:
PO-07-003142 is for a tunnel that we have not received as yet. We are trying to clear up PO-07-002030 which we received the tunnel for fitting, which we did and it was installed on the aircraft. We need the paperwork for this one right now so we can close this workorder.
Thanks
Richard

-----Original Message-----
From: Leanne Elsliger [mailto:lelsliger@dartaero.com]
Sent: Tuesday, January 08, 2008 2:13 PM
To: 'L Lacelle'; 'Richard Smith'
Cc: bbeckett@dartaero.com; dcrowston@eaglecopters.com; 'David Shepherd'; 'Mike Petsche'
Subject: RE: Drive shaft tunnel

Richard: the PO (ref 07-003142) should have the following part number: D205-765-011. This part number contains the three parts you listed in your email. I will send a new certificate of conformity via David Shepherd that references D205-765-011.

Linda: please create a work order for the D205-765-011 kit under batch number 36673. It should contain 1X D3648-041, 1X D3654-1 and 1X D3682-1.

Leanne

Leanne Elsliger, P.Eng
DART Aerospace Ltd.
1270 Aberdeen St.
Hawkesbury, ON, K6A 1K7
T: (613) 632-5200
F: (613) 632-9311

3650-041
3650-9

-----Original Message-----
From: L Lacelle [mailto:llacelle@dartaero.com]
Sent: January 8, 2008 3:16 PM
To: 'Richard Smith'
Cc: bbeckett@dartaero.com; dcrowston@eaglecopters.com; Leanne Elsliger
Subject: RE: Drive shaft tunnel

We have added it all into one P/N, BUT...Leanne says it's the wrong P/N to begin with...Leanne???

LL

-----Original Message-----
From: Richard Smith [mailto:rsmith@eaglecopters.com]
Sent: January 8, 2008 3:12 PM
To: 'L Lacelle'
Cc: bbeckett@dartaero.com; dcrowston@eaglecopters.com
Subject: RE: Drive shaft tunnel

Linda:
I was told that the tunnel now consists of three items. 1ea D3648-041 tunnel, 1ea D3682-1 gasket and 1ea D3654-1 doubler. These are the items that I added to the purchase order when I deleted the D212-725-1-907 part number.
I will need to know the pricing on eack item.
Thanks
Richard

Date: Wednesday, 09/01/2008 7:14:05 AM
User: Linda Lacelle

Process Sheet

Customer : CC-DAR01 Dart Aerospace Ltd.
Job Number : 36667
Estimate Number : 10804
P.O. Number :
This Issue : 09/01/2008 **S.O. No.** :
Prsht Rev. : NC
First Issue : 08/01/2008 **Type** : SMALL /MED FAB
Previous Run : 00015
Written By : _____
Checked & Approved By : _____
Comment :

Drawing Name : D212-725-1-907
Part Number : D2127251907
Drawing Number : PRELIM. ISSUE-U/R
Project Number :
Drawing Revision :
Material :
Due Date : 15/01/2008 **Qty:** 1 **Um:** Each

Additional Product

Job Number:

Seq. #:	Machine Or Operation:	Description :
1.0	D3648041	TUNNEL ASSEMBLY
	Comment: Qty.: 1.0000 Each(s)/Unit Total : 1.0000 Each(s) TUNNEL ASSEMBLY	
2.0	D3650041	WELDMENT ASSEMBLY, TOP PANEL
	Comment: Qty.: 1.0000 Each(s)/Unit Total : 1.0000 Each(s) WELDMENT ASSEMBLY, TOP PANEL	
3.0	D36509	ANGLE
	Comment: Qty.: 1.0000 Each(s)/Unit Total : 1.0000 Each(s) ANGLE	
4.0	D36821	GASKET
	Comment: Qty.: 1.0000 Each(s)/Unit Total : 1.0000 Each(s) GASKET	
5.0	D36541	DOUBLER
	Comment: Qty.: 1.0000 Each(s)/Unit Total : 1.0000 Each(s) DOUBLER	
6.0	SMALL FAB 1	SMALL & MEDIUM FAB RESOURCE 1
	Comment: SMALL & MEDIUM FAB RESOURCE 1	

Date: Wednesday, 09/01/2008 7:14:06 AM
User: Linda Lacelle

Process Sheet

Customer: CC-DAR01 Dart Aerospace Ltd.
Drawing Name: D212-725-1-907

Job Number: 36667
Part Number: D2127251907

Job Number:

Seq. #:	Machine Or Operation:	Description :
7.0	ENGINEERING 1	ENGINEERING RESOURCE #1
	Comment: ENGINEERING RESOURCE #1	
8.0	MFG ENGINEERING	MFG ENGINEERING
	Comment: MFG ENGINEERING	
9.0	QC5	INSPECT WORK TO CURRENT STEP
	Comment: INSPECT WORK TO CURRENT STEP	
10.0	PACKAGING 1	PACKAGING RESOURCE #1
	Comment: PACKAGING RESOURCE #1	
11.0	QC21	FINAL INSPECTION/W/O RELEASE
	Comment: FINAL INSPECTION/W/O RELEASE	

Job Completion

Form: rprocess

Date: Wednesday, 09/01/2008 7:13:00 AM
User: Linda Lacelle

JOB HISTORY : DETAIL

Job Number	: 35973	**Customer**	: Dart Helicopters Services
Estimate Number	: 13044	**DWG Name**	: DRIVE SHAFT TUNNEL
Purchase Order #	:	**Part Number**	: D3648041
Complete Date	: 27/11/2007 11:33:33	**DWG Number**	: D3648, D3650 U/R
		Rev.	: U/R

DUEDATE	ORDERED	DELIVERED
30/11/2007	1	1

2.0 AN960C10L-washer INVENTORY ITEM

DATE	EMPLOYEE	TYPE	Qty		COST	
27/11/2007	LACE01: Lacelle, Linda	AN960C10L	41.000		$2.14	Lot # 106302 Qty. 41
Subtotal:	QTD:	41 CTD:	0		$2.14	

3.0 AN3C3A-Bolt INVENTORY ITEM

DATE	EMPLOYEE	TYPE	Qty		COST	
27/11/2007	LACE01: Lacelle, Linda	AN3C3A	41.000		$14.97	Lot # 106277 Qty. 41
Subtotal:	QTD:	41 CTD:	0		$14.97	

4.0 D3649041-TUNNEL ASSEMBLY, BOTTOM PANEL INVENTORY IT

DATE	EMPLOYEE	TYPE	Qty		COST	
27/11/2007	LACE01: Lacelle, Linda	D3649041	1.000		$143.22	Lot # 35710 Qty. 1
Subtotal:	QTD:	1 CTD:	0		$143.22	

9.0 D36509-ANGLE INVENTORY ITEM

DATE	EMPLOYEE	TYPE	Qty		COST	
27/11/2007	LACE01: Lacelle, Linda	D36509	1.000		$25.24	Lot # 35714 Qty. 1
09/01/2008	LACE01: Lacelle, Linda	D36509	1.000		$26.54	Lot # 35714 Qty. 1
Subtotal:	QTD:	1 CTD:	1		$51.78	

10.0 D3650041-WELDMENT ASSEMBLY, TOP PANEL INVENTORY ITE

DATE	EMPLOYEE	TYPE	Qty		COST	
09/01/2008	LACE01: Lacelle, Linda	D3650041	1.000		$131.59	Lot # 35715 Qty. 1
Subtotal:	QTD:	0 CTD:	1		$131.59	

11.0 D3651041-AFT BASE ASSEMBLY INVENTORY ITEM

DATE	EMPLOYEE	TYPE	Qty		COST	
27/11/2007	LACE01: Lacelle, Linda	D3651041	1.000		$297.09	Lot # 35850 Qty. 1
Subtotal:	QTD:	1 CTD:	0		$297.09	

	TIME	COST
Machine Time:	0.00	$0.00
Labor:	0.00	$0.00
Sub-contract (external Op.):		$0.00
INVENTORY ITEM:		$640.79
SUB-COMPONENT (SUB-JOB):		$0.00
Total:		$640.79

COST PER UNIT: $640.79

3648-041

3650-041
3650-9

~~3651-1~~

3682-1
3654-1

Eight

Dart Aerospace Ltd.

Date: Tuesday, 08/01/2008 9:50:39 AM
User: Linda Lacelle

JOB HISTORY : DETAIL

Job Number	: 35973	**Customer**	: Dart Helicopters Services
Estimate Number	: 13044	**DWG Name**	: DRIVE SHAFT TUNNEL
Purchase Order #	:	**Part Number**	: D3648041
Complete Date	: 27/11/2007 11:33:33	**DWG Number**	: D3648, D3650 U/R **Rev.** : U/R

DUEDATE	ORDERED	DELIVERED
30/11/2007	1	1

2.0 AN960C10L-washer INVENTORY ITEM

DATE	EMPLOYEE	TYPE	Qty		COST	
27/11/2007	LACE01: Lacelle, Linda	AN960C10L	41.000		$2.14	Lot # 106302 Qty. 41
Subtotal:	QTD:	41 CTD:	0		$2.14	

3.0 AN3C3A-Bolt INVENTORY ITEM

DATE	EMPLOYEE	TYPE	Qty		COST	
27/11/2007	LACE01: Lacelle, Linda	AN3C3A	41.000		$14.97	Lot # 106277 Qty. 41
Subtotal:	QTD:	41 CTD:	0		$14.97	

4.0 D3649041-TUNNEL ASSEMBLY, BOTTOM PANEL INVENTORY IT

DATE	EMPLOYEE	TYPE	Qty		COST	
27/11/2007	LACE01: Lacelle, Linda	D3649041	1.000		$143.22	Lot # 35710 Qty. 1
Subtotal:	QTD:	1 CTD:	0		$143.22	

9.0 D36509-ANGLE INVENTORY ITEM

DATE	EMPLOYEE	TYPE	Qty		COST	
27/11/2007	LACE01: Lacelle, Linda	D36509	1.000		$25.24	Lot # 35714 Qty. 1
Subtotal:	QTD:	1 CTD:	0		$25.24	

10.0 D3651041-AFT BASE ASSEMBLY INVENTORY ITEM

DATE	EMPLOYEE	TYPE	Qty		COST	
27/11/2007	LACE01: Lacelle, Linda	D3651041	1.000		$297.09	Lot # 35850 Qty. 1
Subtotal:	QTD:	1 CTD:	0		$297.09	

	TIME	COST
Machine Time:	0.00	$0.00
Labor:	0.00	$0.00
Sub-contract (external Op.):		$0.00
INVENTORY ITEM:		$482.66
SUB-COMPONENT (SUB-JOB):		$0.00
Total:		$482.66

COST PER UNIT: $482.66

00203

20 hrs.

Form: jdetail

Eric Charbonneau

From: Eric Charbonneau [echarbonneau@dartaero.com]
Sent: November 14, 2007 9:44 AM
To: Mike Petsche; Roberto Fuentes (rfuentes@dartaero.com)
Cc: Linda Lacelle (llacelle@dartaero.com)
Subject: drive shaft tunnel

Good morning guys, since we are making parts from drawings that are not released I will need a preliminary ECN in order to continue, this project as been going against our normal system since day one. Maybe we should have assigned an engineer here in Hawkesbury for this project to follow our normal procedures for new product, something we should consider for future projects that get designed in Calgary.

Thanks,

ERIC CHARBONNEAU
Production Engineering Coordinator
***DART** aerospace Ltd.*
T(613) 632-5200
F(613) 632-4443
echarbonneau@dartaero.com

L Lacelle

From: Bill Beckett [bbeckett@dartaero.com]
Sent: January 8, 2008 6:48 AM
To: 'L Lacelle'
Cc: 'Brigitte Golden'; Richard Smith; Dave Crowston; David Shepherd
Subject: FW: Drive shaft tunnel

Linda,
Please get the costs for this Tunnel to Richard Smith so that he can give us a corrected PO. I would like to invoice today.
Thanks,
Bill

-----Original Message-----
From: David Crowston [mailto:dcrowston@eaglecopters.com]
Sent: January 7, 2008 5:19 PM
To: Bill Beckett (E-mail)
Subject: FW: Drive shaft tunnel

Bill,
Dave S got me a certificate of conformity for the tunnel parts. I will get Richard Smith to Get the PO adjusted so we can process the billing.
Dave C

-----Original Message-----
From: David Crowston [mailto:dcrowston@eaglecopters.com]
Sent: Monday, January 07, 2008 11:16 AM
To: Bill Beckett (E-mail)
Subject: FW: Drive shaft tunnel

Bill,
I sent this to Dave while he was out there before christmas but he may have forgotten it. You might be able to direct it to the right person. Delivery for this aircraft is in about a week so we need the paperwork to close the work order.
Thank you.
Dave C

-----Original Message-----
From: David Crowston [mailto:dcrowston@eaglecopters.com]
Sent: Friday, December 14, 2007 12:35 PM
To: David Shepard (E-mail)
Subject: Drive shaft tunnel

Dave,
I presume you are out in Hawksbury. Can you talk to whoever you need to get certification sent to us for the first drive shaft tunnel? We never officially received it.
It fit well now and we will keep it as a "part" for this aircraft.
It was ordered on PO 07-002030 (P/N D212-725-1-907) Thanks Dave C

Date: Tuesday, 08/01/2008 9:48:29 AM
User: Linda Lacelle

JOB HISTORY : DETAIL

Job Number	: 35899	**Customer**	: Dart Helicopters Services
Estimate Number	: 13055	**DWG Name**	: DOUBLER
Purchase Order #	:	**Part Number**	: D36541
Complete Date	: 27/11/2007 10:47:51	**DWG Number**	: D3654 UNDER REVIEW **Rev.** : U/R

DUEDATE	ORDERED	DELIVERED
27/11/2007	1	1

1.0 M304S16GA-304/316 .063 Sheet INVENTORY ITEM

DATE	EMPLOYEE	TYPE	Qty		COST	
27/11/2007	LACE01: Lacelle, Linda	M304S16GA	0.368		$3.35	Lot # 105061 Qty. 0
Subtotal:	QTD:	0 CTD:	0		$3.35	

		TIME	COST
	Machine Time:	0.00	$0.00
	Labor:	0.00	$0.00
	Sub-contract (external Op.):		$0.00
	INVENTORY ITEM:		$3.35
	SUB-COMPONENT (SUB-JOB):		$0.00
Total:			$3.35

COST PER UNIT: $3.35

Date: Tuesday, 08/01/2008 9:48:05 AM
User: Linda Lacelle

JOB HISTORY : DETAIL

Job Number	: 35714	**Customer**	: Dart Helicopters Services
Estimate Number	: 13034	**DWG Name**	: TOP PANEL ASS'Y
Purchase Order #	:	**Part Number**	: D36509
Complete Date	: 27/11/2007 10:49:13	**DWG Number**	: D3650 UNDER REVIEW **Rev.** : U/R

DUEDATE	ORDERED	DELIVERED
21/11/2007	1	2

1.0 M304S24GA-304/316 .025 Sheet INVENTORY ITEM

DATE	EMPLOYEE	TYPE	Qty		COST	
19/11/2007	BLEC01: Bleck, Henry	M304S24GA	0.010		$0.06	Lot # 105592 Qty. 0
27/11/2007	LACE01: Lacelle, Linda	M304S24GA	0.900		$5.04	Lot # 105592 Qty. 1
Subtotal:	QTD:	0 CTD:	1		$5.10	

2.0 WATER JET Internal Operation

DATE	EMPLOYEE	TYPE	Qty	Time(hrs)	COST	MTime(hrs)	Mach.Cost
19/11/2007	BLEC01: Bleck, Henry	Run	2.000	1.33	$20.68	1.33	27.30
Subtotal:	QTD:	2 CTD:	0	1.33	$47.98		

	TIME	COST
Machine Time:	1.33	$27.30
Labor:	1.33	$20.68
Sub-contract (external Op.):		$0.00
INVENTORY ITEM:		$5.10
SUB-COMPONENT (SUB-JOB):		$0.00
Total:		$53.08
COST PER UNIT:		$26.54

Date: Tuesday, 08/01/2008 9:47:30 AM
User: Linda Lacelle

JOB HISTORY : DETAIL

Job Number	: 35715	**Customer**	: Dart Helicopters Services
Estimate Number	: 13067	**DWG Name**	: TOP PANNEL ASS'Y
Purchase Order #	:	**Part Number**	: D3650041
Complete Date	: 27/11/2007 11:11:55	**DWG Number**	: D3650 UNDER REVIEW **Rev.** : U/R

DUEDATE	ORDERED	DELIVERED
21/11/2007	1	1

1.0 MS20427M33-Rivet INVENTORY ITEM

DATE	EMPLOYEE	TYPE	Qty		COST	
27/11/2007	LACE01: Lacelle, Linda	MS20427M33	88.000		$8.75	Lot # 105728 Qty. 88
Subtotal:	QTD:	88 CTD:	0		$8.75	

3.0 D36501-AFT PANEL INVENTORY ITEM

DATE	EMPLOYEE	TYPE	Qty		COST	
27/11/2007	LACE01: Lacelle, Linda	D36501	1.000		$30.17	Lot # 35707 Qty. 1
Subtotal:	QTD:	1 CTD:	0		$30.17	

4.0 D36503-CENTER PANEL INVENTORY ITEM

DATE	EMPLOYEE	TYPE	Qty		COST	
27/11/2007	LACE01: Lacelle, Linda	D36503	1.000		$22.25	Lot # 35708 Qty. 1
Subtotal:	QTD:	1 CTD:	0		$22.25	

5.0 D36505-CENTER PANEL INVENTORY ITEM

DATE	EMPLOYEE	TYPE	Qty		COST	
27/11/2007	LACE01: Lacelle, Linda	D36505	1.000		$65.58	Lot # 35709 Qty. 1
Subtotal:	QTD:	1 CTD:	0		$65.58	

6.0 AN3C3A-Bolt INVENTORY ITEM

DATE	EMPLOYEE	TYPE	Qty		COST	
27/11/2007	LACE01: Lacelle, Linda	AN3C3A	12.000		$4.38	Lot # 106277 Qty. 12
Subtotal:	QTD:	12 CTD:	0		$4.38	

7.0 AN960C10-WASHER INVENTORY ITEM

DATE	EMPLOYEE	TYPE	Qty		COST	
27/11/2007	LACE01: Lacelle, Linda	AN960C10	12.000		$0.46	Lot # 106302 Qty. 12
Subtotal:	QTD:	12 CTD:	0		$0.46	

	TIME	COST
Machine Time:	0.00	$0.00
Labor:	0.00	$0.00
Sub-contract (external Op.):		$0.00
INVENTORY ITEM:		$131.59
SUB-COMPONENT (SUB-JOB):		$0.00
Total:		$131.59

COST PER UNIT: $131.59

Date: Tuesday, 08/01/2008 9:43:01 AM
User: Linda Lacelle

JOB HISTORY : DETAIL

Job Number	: 35974	**Customer**	: Dart Helicopters Services		
Estimate Number	: 13035	**DWG Name**	: GASKET		
Purchase Order #	:	**Part Number**	: D36821		
Complete Date	: 27/11/2007 10:44:01	**DWG Number**	: D3682 UNDER REVIEW	**Rev.**	: U/R

DUEDATE	ORDERED	DELIVERED
30/11/2007	1	1

1.0 G89-coated cloth INVENTORY ITEM

DATE	EMPLOYEE	TYPE	Qty		COST	
27/11/2007	LACE01: Lacelle, Linda	G89	0.353		$6.92	Lot # 105928 Qty. 0

Subtotal: QTD: 0 CTD: 0 $6.92

	TIME	COST
Machine Time:	0.00	$0.00
Labor:	0.00	$0.00
Sub-contract (external Op.):		$0.00
INVENTORY ITEM:		$6.92
SUB-COMPONENT (SUB-JOB):		$0.00
Total:		$6.92

COST PER UNIT: $6.92

Date: Friday, 11/23/2007 11:42:29 AM
User: Chantal Lavoie

Process Sheet

Customer : CU-DAR001 Dart Helicopters Services
Job Number : 35973
Estimate Number : 13044
P.O. Number :
This Issue : 11/23/2007 **S.O. No.** :
Prsht Rev. : NC
First Issue : / / **Type** : SMALL /MED FAB
Previous Run : 35016
Written By :
Checked & Approved By :
Comment : Est Rev A New Issue 07-10-03 EC verified by: DD

Drawing Name : DRIVE SHAFT TUNNEL
Part Number : D3648041
Drawing Number : D3648, D3650 U/R
Project Number : N/A
Drawing Revision : U/R
Material :
Due Date : 11/30/2007 **Qty:** 1 **Um:** Each

POSITIVE RECALL

Additional Product

Job Number:

Seq. #:	Machine Or Operation:	Description :
1.0	PACKAGING 1	PACKAGING RESOURCE #1
	Comment: PACKAGING RESOURCE #1 Pick Packing Kit	
2.0	AN960C10L	washer
	Comment: Qty.: 41.0000 Each(s)/Unit Total : 41.0000 Each(s) washer batch: M 106302	
3.0	~~AN3C10A~~ AN3C-3A	Bolt
	Comment: Qty.: 41.0000 Each(s)/Unit Total : 41.0000 Each(s) Bolt batch: M106277	
4.0	D3649041	TUNNEL ASSEMBLY, BOTTOM PANEL
	Comment: Qty.: 1.0000 Each(s)/Unit Total : 1.0000 Each(s) TUNNEL ASSEMBLY, BOTTOM PANEL batch: 335710	
5.0	D36501	AFT PANEL
	Comment: Qty.: 1.0000 Each(s)/Unit Total : 1.0000 Each(s) AFT PANEL batch: B35707	07.11.23

Form: rprocess

Dart Aerospace Ltd

W/O:		WORK ORDER CHANGES					
DATE	STEP	PROCEDURE CHANGE	By	Date	Qty	Approval Chief Eng / Prod Mgr	Approval QC Inspector

Part No: _____ **PAR #:** _____ **Fault Category:** _____ **NCR:** Yes No **DQA:** _____ **Date:** _____

QA: N/C Closed: _____ **Date:** _____

NCR:		WORK ORDER NON-CONFORMANCE (NCR)						
DATE	STEP	Description of NC Section A	Corrective Action Section B			Verification Section C	Approval Chief Eng	Approval QC Inspector
			Initial Chief Eng	Action Description Chief Eng	Sign & Date			

NOTE: Date & initial all entries

Date: Friday, 11/23/2007 11:42:30 AM
User: Chantal Lavoie

Process Sheet

Customer: CU-DAR001 Dart Helicopters Services **Drawing Name:** DRIVE SHAFT TUNNEL

Job Number: 35973 **Part Number:** D3648041

POSITIVE RECALL

Job Number:

Seq. #:	Machine Or Operation:	Description :
6.0	D36503	CENTER PANEL
	Comment: Qty.: 1.0000 Each(s)/Unit Total : 1.0000 Each(s) CENTER PANEL batch: B35708	02-11-23
7.0	D36505	CENTER PANEL
	Comment: Qty.: 1.0000 Each(s)/Unit Total : 1.0000 Each(s) CENTER PANEL batch: B35709	
8.0	D36507	SEAL
	Comment: Qty.: 1.0000 Each(s)/Unit Total : 1.0000 Each(s) SEAL batch:	
9.0	D36509	ANGLE
	Comment: Qty.: 1.0000 Each(s)/Unit Total : 1.0000 Each(s) ANGLE batch:	
10.0	D3651041	AFT BASE ASSEMBLY
	Comment: Qty.: 1.0000 Each(s)/Unit Total : 1.0000 Each(s) AFT BASE ASSEMBLY batch: B35850	
11.0	NAS9307M403	RIVET
	Comment: Qty.: 12.0000 Each(s)/Unit Total : 12.0000 Each(s) RIVET batch:	
12.0	AN960C4	WASHER
	Comment: Qty.: 12.0000 Each(s)/Unit Total : 12.0000 Each(s) WASHER batch:	

Form: rprocess

Dart Aerospace Ltd

W/O:		WORK ORDER CHANGES					
DATE	STEP	PROCEDURE CHANGE	By	Date	Qty	Approval Chief Eng / Prod Mgr	Approval QC Inspector

Part No: _____ **PAR #:** _____ **Fault Category:** _____ **NCR:** Yes No **DQA:** _____ **Date:** _____

QA: N/C Closed: _____ **Date:** _____

NCR:		WORK ORDER NON-CONFORMANCE (NCR)						
DATE	STEP	Description of NC Section A	Corrective Action Section B			Verification Section C	Approval Chief Eng	Approval QC Inspector
			Initial Chief Eng	Action Description Chief Eng	Sign & Date			

NOTE: Date & initial all entries

Date: Friday, 11/23/2007 11:42:30 AM
User: Chantal Lavoie

Process Sheet

Customer: CU-DAR001 Dart Helicopters Services
Drawing Name: DRIVE SHAFT TUNNEL

POSITIVE RECALL

Job Number: 35973
Part Number: D3648041

Job Number:

Seq. #:	Machine Or Operation:	Description :
13.0	SMALL FAB 1	SMALL & MEDIUM FAB RESOURCE 1

Comment: SMALL & MEDIUM FAB RESOURCE 1

1-Assemble as per dwg D3648 and D3650

2-Seal gaps using 3M 1357 adhesive batch: M105623 07.11.23

14.0	QC5	INSPECT WORK TO CURRENT STEP

LE 07.11.23

Comment: INSPECT WORK TO CURRENT STEP

15.0	PACKAGING 1	PACKAGING RESOURCE #1

Comment: PACKAGING RESOURCE #1
Identify and Stock
Location:_____

DRW - DACAG

CL 07/11/23 ①

16.0	QC21	FINAL INSPECTION/W/O RELEASE

Comment: FINAL INSPECTION/W/O RELEASE

D 07.11.27
SL 07.11.27

Job Completion

POSITIVE RECALL
EFFECTIVE 07.11.23 **AUTH** _____
RELEASED _____ **DATE** _____

Form: rprocess

Dart Aerospace Ltd

W/O:		WORK ORDER CHANGES					
DATE	STEP	PROCEDURE CHANGE	By	Date	Qty	Approval Chief Eng / Prod Mgr	Approval QC Inspector

Part No: _____ **PAR #:** _____ **Fault Category:** _____ **NCR:** Yes No **DQA:** _____ **Date:** _____

QA: N/C Closed: _____ **Date:** _____

NCR:		WORK ORDER NON-CONFORMANCE (NCR)						
DATE	STEP	Description of NC Section A	Corrective Action Section B			Verification Section C	Approval Chief Eng	Approval QC Inspector
			Initial Chief Eng	Action Description Chief Eng	Sign & Date			

NOTE: Date & initial all entries

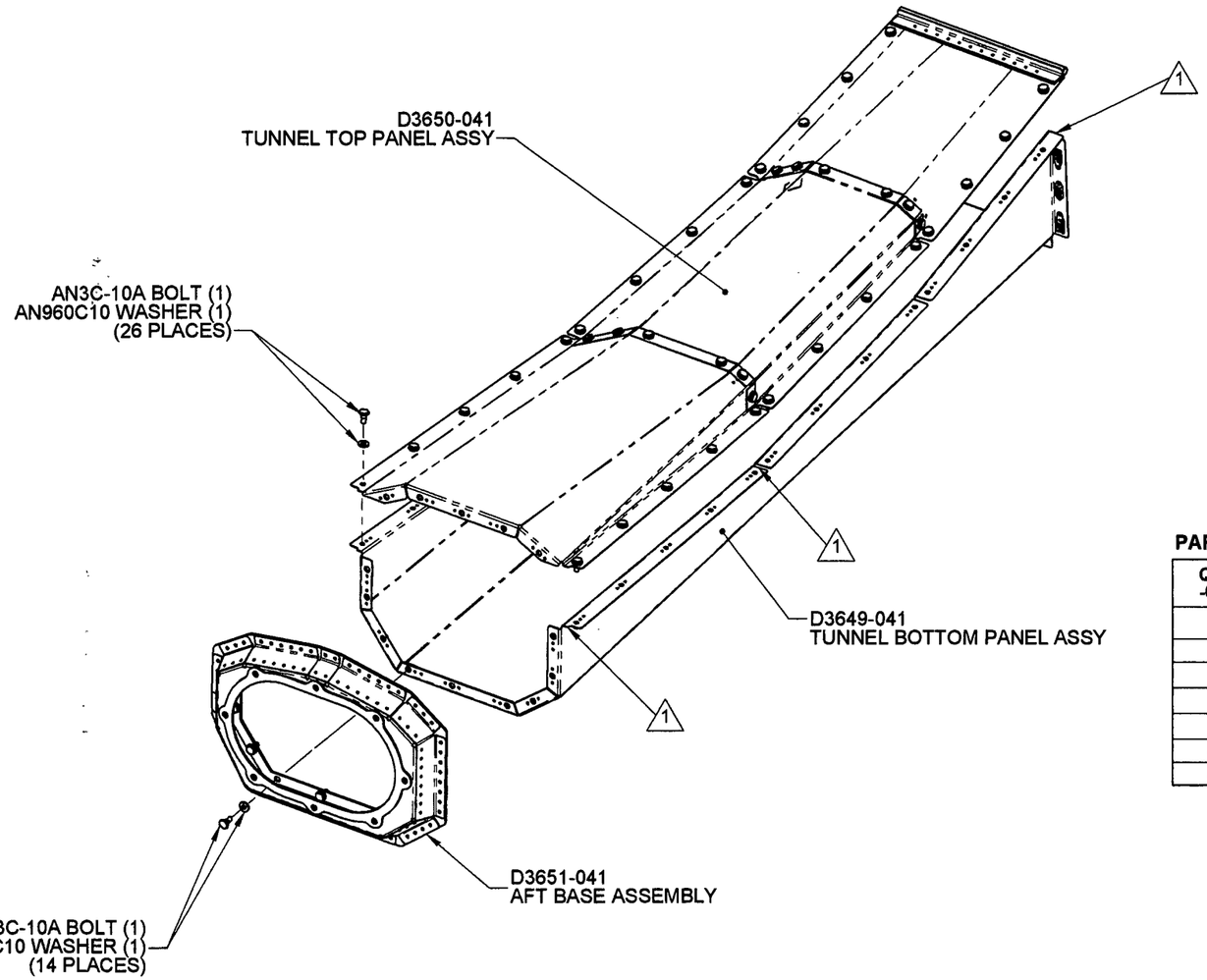

PART LIST

QTY -041	PART NUMBER	DESCRIPTION
X	D3648-041	DRIVE SHAFT TUNNEL ASSYEMBLY
1	D3649-041	TUNNEL BOTTOM PANEL ASSEMBLY
1	D3650-041	TUNNEL TOP PANEL ASSEMBLY
1	D3651-041	AFT BASE ASSEMBLY
40	AN3C-10A	BOLT
40	AN960C10	WASHER

D3648-041 DRIVE SHAFT TUNNEL ASSEMBLY

PRELIMINARY ISSUE

NOTES:
1) SEAL ANY TYPICAL GAPS USING 3M HIGH PERFORMANCE CONTACT ADHESIVE 1357
2) FINISH: NONE
3) TOLERANCES: PER DART QSI 018 UNLESS OTHERWISE NOTED
4) UNITS: INCHES UNLESS OTHERWISE NOTED
5) BREAK SHARP EDGES: 0.005 TO 0.010 MAX
6) IDENTIFICATION: IDENTIFY WITH DART P/N D3648-041 USING FINE POINT PERMANENT INK MARKER
7) TORQUE FASTENERS TO 15-25 in-lb
8) WEIGHT: 9.2 lbs

REV.	DESCRIPTION	BY	DATE
A	NEW ISSUE	RF	07.11.07

DESIGN	RF	**DART AEROSPACE LTD** HAWKESBURY, ONTARIO, CANADA
DRAWN	RF	
CHECKED		DRAWING NO. D3648 REV. A SHEET 1 OF 1
MFG. APPR.		
APPROVED		TITLE DRIVE SHAFT TUNNEL ASSY SCALE 1:12
DE APPR.		
DATE	07.11.07	

COPYRIGHT © 2007 BY DART AEROSPACE LTD
THIS DOCUMENT IS PRIVATE AND CONFIDENTIAL AND IS SUPPLIED ON THE EXPRESS CONDITION THAT IT IS NOT TO BE USED FOR ANY PURPOSE OR COPIED OR COMMUNICATED TO ANY OTHER PERSON WITHOUT WRITTEN PERMISSION FROM DART AEROSPACE LTD

Dart Aerospace Ltd

1270 Aberdeen Street
Hawkesbury, Ontario K6A 1K7

Transfer Slip

Date	Page
Nov 27, 2007	1
Transfer Number	
TRF0000037	

Transfer To:

Quaratine **QRNTN**

Transfer From:

DACALG

Reference	Description	Required By
		Nov 27, 2007

Item Number	Description	Quantity Transferred	UOM	Quantity Received
D3648041	TUNNEL ASSEMBLY	1.0000	Each	

Comments:

DART AEROSPACE LTD
1270 Aberdeen Street
Hawkesbury, ON, K6A 1K7
CANADA

Tel: 613 632 5200
Fax: 613 632 1185

Email: heli@dartaero.com
Web Site: www.dartaero.com

CERTIFICATE OF CONFORMANCE

Part no:	**Description**:	**Drawing:**	**Quantity**:	**Batch**:
D3648-041	Drive Shaft Tunnel	D3648 Rev. A	One	35973
D3654-1	Doubler	D3654 Rev. A	One	35899
D3682-1	Gasket	D3682 Rev. A	One	35974

ALL MATERIALS AND PARTS HAVE BEEN INSPECTED AND COMPLY WITH THE DRAWINGS LISTED ABOVE.

DATE: 7/Jan/2008

BY: Susanne Sheldon, eng
APPROVED QA SIGNATORY

Leanne Elsliger, P. Eng
DESIGN ENGINEER

Date: Tuesday, 11/13/2007 2:29:00 PM
User: Eric Charbonneau

Process Sheet

Customer	: CU-DAR001 Dart Helicopters Services	**Drawing Name**	: WELDMENT TOP PANEL
Job Number	: 35707		
Estimate Number	: 13028		
P.O. Number	:	**Part Number**	: D36501
This Issue	: 11/13/2007 **S.O. No.** :	**Drawing Number**	: D3650 UNDER REVIEW
Prsht Rev.	: NC	**Project Number**	: N/A
First Issue	: 11/13/2007 **Type** : SMALL /MED FAB	**Drawing Revision**	: U/R
Previous Run	: 35147	**Material**	:
Written By	:	**Due Date**	: 11/20/2007 **Qty:** 1 **Um:** Each
Checked & Approved By	:		
Comment	: Est Rev:A New Issue 07-09-27 DD verified by: EC		

POSITIVE RECALL

Additional Product

Job Number:

Seq. #:	Machine Or Operation:	Description :
1.0	M304S24GA	304/316 .025 Sheet

Comment: Qty.: 1.6622 sf(s)/Unit Total : 1.6622 sf(s)
304/316 SS sheet 24 ga (0.025" thick)
Batch: 105592 IB 07-11-14

PD → Last Page

2.0	WATER JET	FLOW WATER JET

Comment: FLOW WATER JET
1-Cut as per Dwg D3650
Dwg Rev: PRE.L. IB 07-11-14
Prog Rev: PRE.L
2-Deburr if necessary IB 07-11-14

3.0	QC2	INSPECT PARTS AS THEY COME OFF MACHINE

IB 07-11-14

Comment: INSPECT PARTS AS THEY COME OFF MACHINE

4.0	QC8	SECOND CHECK

Comment: SECOND CHECK IB 07.11.14

5.0	BRAKE NC	NC BRAKE

Comment: NC BRAKE
Form as per Dwg D3650 IB 07.11.22

Date: Tuesday, 11/13/2007 2:29:00 PM
User: Eric Charbonneau

Process Sheet

Customer: CU-DAR001 Dart Helicopters Services **Drawing Name:** WELDMENT TOP PANEL

Job Number: 35707 **Part Number:** D36501

Job Number:

Seq. #:	Machine Or Operation:	Description :
6.0	QC5	INSPECT WORK TO CURRENT STEP
	Comment: INSPECT WORK TO CURRENT STEP	
7.0	MS20427M33	Rivet
	Comment: Qty.: 22.0000 Each(s)/Unit Total : 22.0000 Each(s) Rivet batch: M105728	
8.0	MS210603K	Nut Plate
	Comment: Qty.: 8.0000 Each(s)/Unit Total : 8.0000 Each(s) Nut Plate batch: M105938	
9.0	MS210623K	Nut Plate
	Comment: Qty.: 3.0000 Each(s)/Unit Total : 3.0000 Each(s) Nut Plate batch: M105938	
10.0	SMALL FAB 1	SMALL & MEDIUM FAB RESOURCE 1
	Comment: SMALL & MEDIUM FAB RESOURCE 1 Assemble as per dwg D3650	07.11.22
11.0	QC5	INSPECT WORK TO CURRENT STEP VE 07.11.23
	Comment: INSPECT WORK TO CURRENT STEP	
12.0	PACKAGING 1	PACKAGING RESOURCE #1
	Comment: PACKAGING RESOURCE #1 Identify and stock Location:_____	07/11/28 07.11.22

Form: rprocess

Date: Tuesday, 11/13/2007 2:29:00 PM
User: Eric Charbonneau

Process Sheet

Customer: CU-DAR001 Dart Helicopters Services **Drawing Name:** WELDMENT TOP PANEL

Job Number: 35707 **Part Number:** D36501

Job Number:

Seq. #:	Machine Or Operation:	Description :
13.0	QC21	FINAL INSPECTION/W/O RELEASE

Comment: FINAL INSPECTION/W/O RELEASE D 07.11.27

Job Completion

U 07.11.27

POSITIVE RECALL
EFFECTIVE 07.11.14 AUTH U
RELEASED _____ DATE _____

SEE ATTACHED STEPS 12a
12b
12c
UE 07.11.22

Form: rprocess

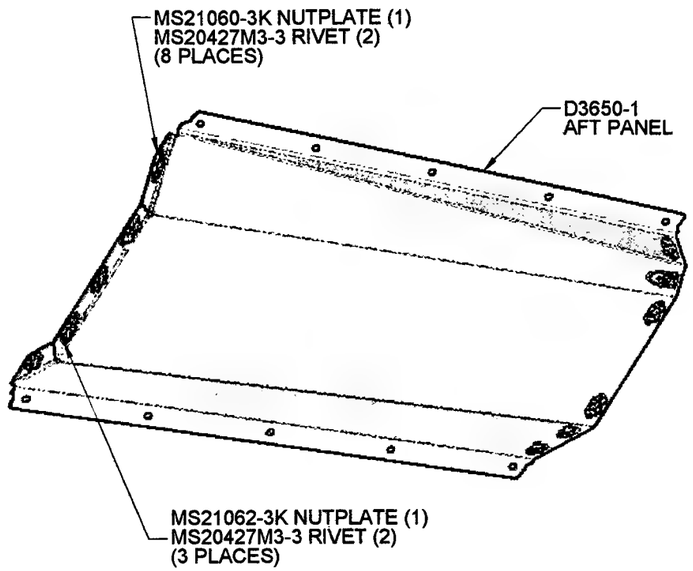

D3650-1 AFT PANEL

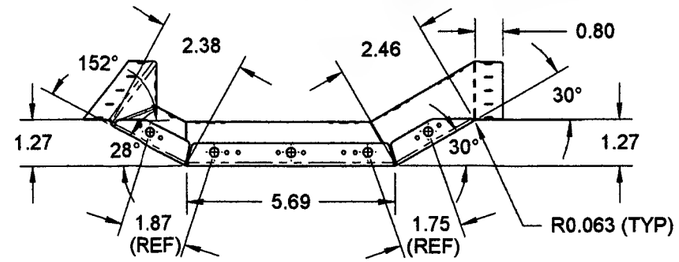

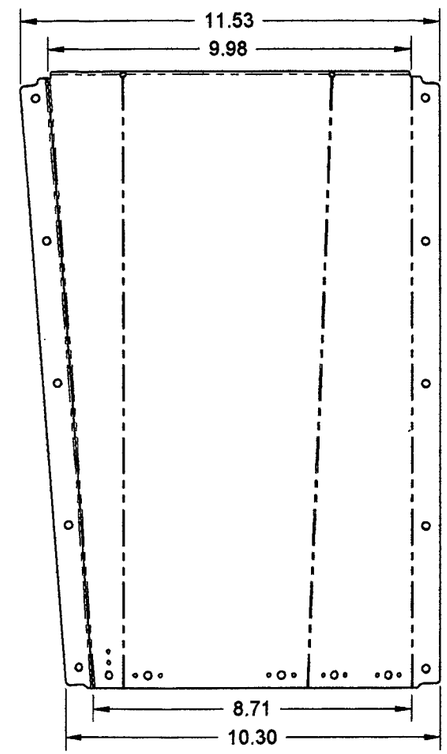

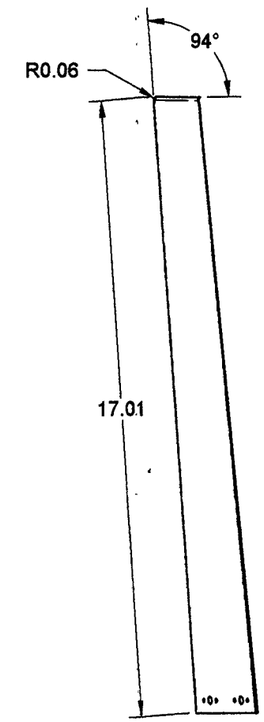

PRELIMINARY ISSUE

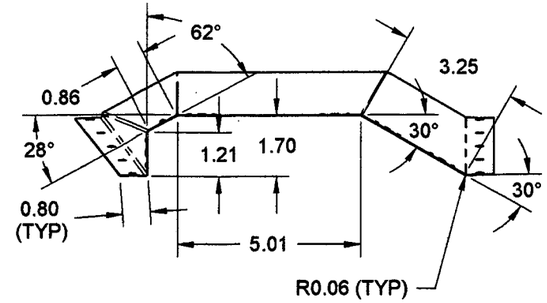

D3650-1 AFT PANELBEND DETAIL
(MAKE FROM D3650-1F FLAT PATTERN)

PART LIST

QTY -1	PART NUMBER	DESCRIPTION
X	D3650-1	AFT PANEL
22	MS20427M3-3	RIVET
8	MS21060-3K	NUTPLATE
3	MS21062-3K	NUT PLATE

NOTES:
1) FINISH: NONE
2) TOLERANCES: PER DART QSI 018 UNLESS OTHERWISE NOTED
3) UNITS: INCHES UNLESS OTHERWISE NOTED
4) BREAK SHARP EDGES: 0.005 TO 0.010 MAX
5) IDENTIFICATION: IDENTIFY WITH DART P/N D3650-1 USING FINE POINT PERMANENT INK MARKER
6) WEIGHT: 1.3 lbs

DESIGN	RF	**DART AEROSPACE LTD** HAWKESBURY, ONTARIO, CANADA
DRAWN	RF	
CHECKED		DRAWING NO. D3650 REV. A SHEET 2 OF 8
MFG. APPR.		
APPROVED		TITLE TOP PANEL ASSEMBLY SCALE 1:4
DE APPR.		
DATE	07.11.07	

COPYRIGHT © 2007 BY DART AEROSPACE LTD
THIS DOCUMENT IS PRIVATE AND CONFIDENTIAL AND IS SUPPLIED ON THE EXPRESS CONDITION THAT IT IS NOT TO BE USED FOR ANY PURPOSE OR COPIED OR COMMUNICATED TO ANY OTHER PERSON WITHOUT WRITTEN PERMISSION FROM DART AEROSPACE LTD.

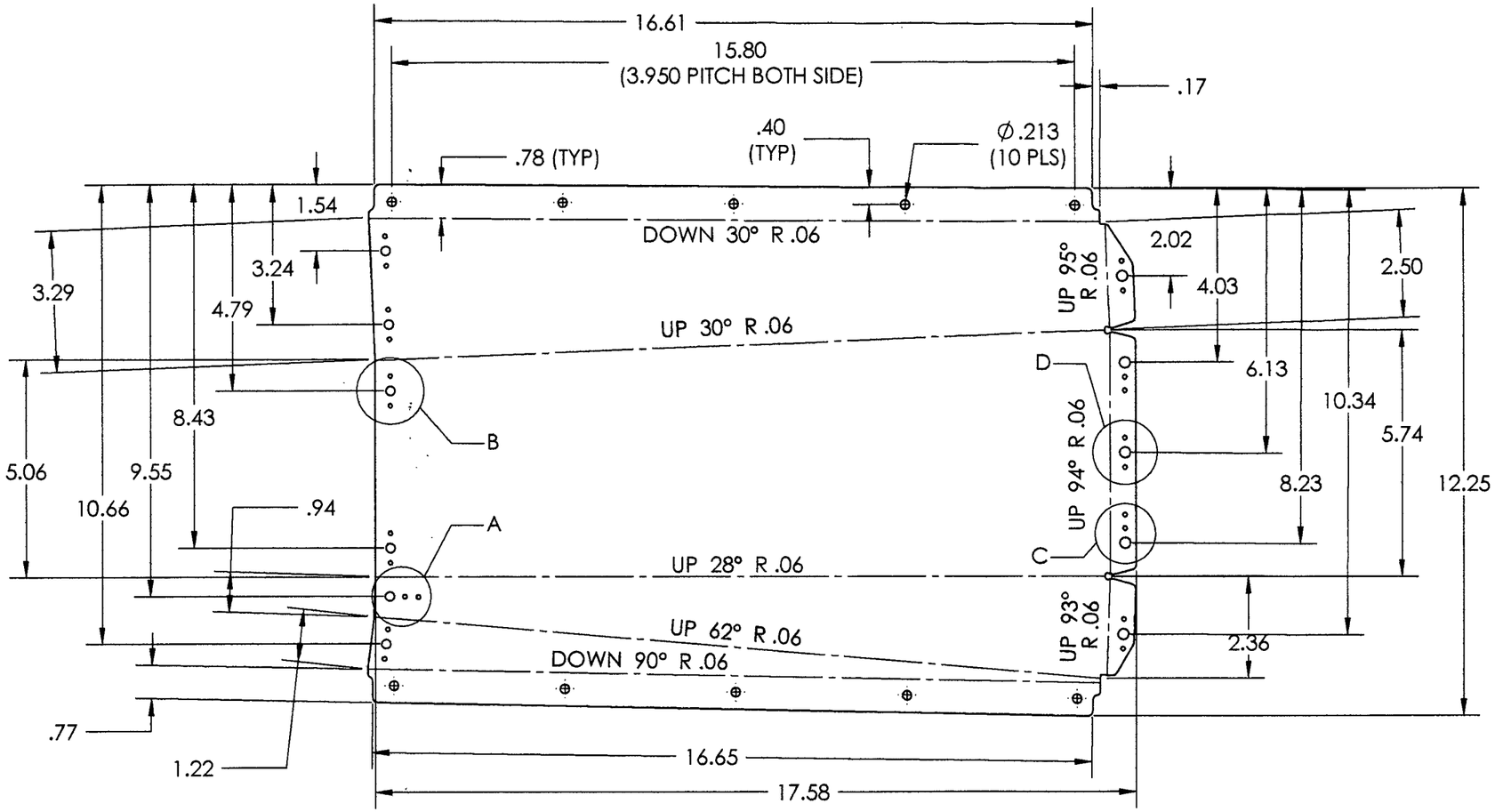

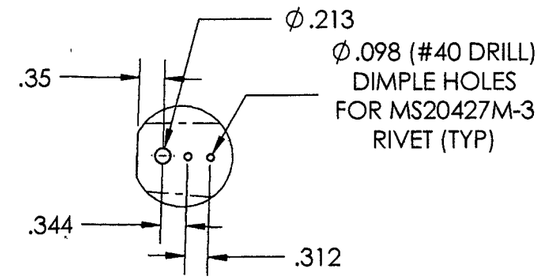

DETAIL A
SCALE 1 : 1

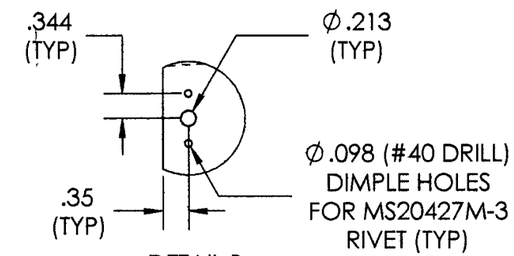

DETAIL B
SCALE 1 : 1

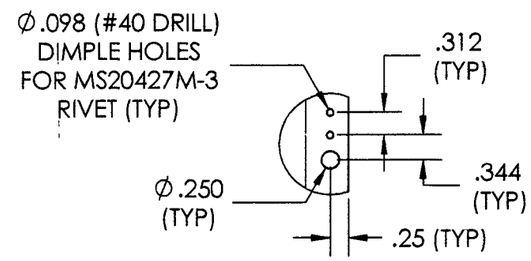

DETAIL C
SCALE 1 : 2

D3650-1F FLAT PATTERN

PRELIMINARY ISSUE

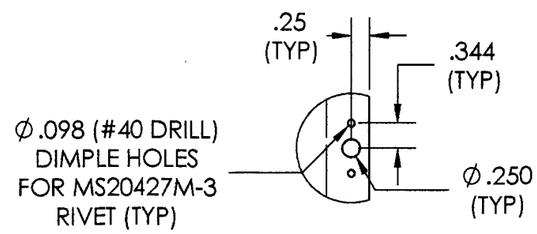

DETAIL D
SCALE 1 : 2

NOTES:
1) MATERIAL: AISI 304/316 STAINLESS STEEL 0.025 THICK (24 GAUGE) SHEET, PER MIL-S-5019 (REF. DART SPEC. M304S24GA)
2) FINISH: NONE
3) TOLERANCES: PER DART QSI 018 UNLESS OTHERWISE NOTED
4) UNITS: INCHES UNLESS OTHERWISE NOTED
5) BREAK SHARP EDGES: 0.005 TO 0.010 MAX
6) IDENTIFICATION: IDENTIFY WITH DART P/N D3650-5 USING FINE POINT PERMANENT INK MARKER

DESIGN	RF	**DART AEROSPACE LTD** HAWKESBURY, ONTARIO, CANADA
DRAWN	RF	
CHECKED		DRAWING NO. D3650 — REV. A — SHEET 3 OF 8
MFG. APPR.		
APPROVED		TITLE: TOP PANEL ASSEMBLY — SCALE 1:5
DE APPR.		
DATE	07.11.07	

COPYRIGHT © 2007 BY DART AEROSPACE LTD
THIS DOCUMENT IS PRIVATE AND CONFIDENTIAL AND IS SUPPLIED ON THE EXPRESS CONDITION THAT IT IS NOT TO BE USED FOR ANY PURPOSE OR COPIED OR COMMUNICATED TO ANY OTHER PERSON WITHOUT WRITTEN PERMISSION FROM DART AEROSPACE LTD

DART AEROSPACE LTD	Work Order:	35707
Description: WELD MENT TOP PANEL	Part Number:	D3650-1
Inspection Dwg: D3650-1 Rev: PRE L.		Page 1 of 1

FIRST ARTICLE INSPECTION CHECKLIST

[X] First Article [ ] Prototype

Drawing Dimension	Tolerance	Actual Dimension	Accept	Reject	Method of Inspection	Comments
Ø .098	+ .004 - .001	.100				
Ø .213	+ .005 - .001	.215				
.312	+/- .010	.312				
.344	+/- .010	.344				
.35	+/- .030	.35				
12.25	+/- .030	12.25				
10.34	+/- .030	10.34				
16.61	+/- .030	16.61				
15.86	+/- .030	15.86				
10.66	+/- .030	11.66				
9.55	+/- .030	9.55				
8.43	+/- .030	8.43				
17.58	+/- .030	17.58				
16.65	+/- .030	16.65				
.40	+/- .030	.40				

Measured by:	HB	Audited by:	HB	Prototype Approval:	
Date:	07-11-14	Date:	07.11.14	Date:	

Rev	Date	Change	Revised by	Approved
A		New Issue	KJ/JLM	

W/O 35707

VE 07.11.22

Step 12a

Tag with positive recall and transfer to Dart Engineering Calgary, Attention Roberto Fuentes

CL 07/11/23

VE 07.11.22

Step 12b

QC5 (Upon receipt of STC)

VE 07.11.22

Step 12c

Remove positive recall and release part to Eagle Copters

Dart Aerospace Ltd 07

W/O:		WORK ORDER CHANGES					
DATE	STEP	PROCEDURE CHANGE	By	Date	Qty	Approval Chief Eng / Prod Mgr	Approval QC Inspector

Part No: _____ PAR #: _____ Fault Category: _____ NCR: Yes (No) DQA: [illegible] Date: 07/11/22

QA: N/C Closed: _____ Date: _____

NCR:		WORK ORDER NON-CONFORMANCE (NCR)						
DATE	STEP	Description of NC Section A	Corrective Action Section B			Verification Section C	Approval Chief Eng	Approval QC Inspector
			Initial Chief Eng	Action Description Chief Eng	Sign & Date			
07/11/22	# 1.0	wrong mat. was used 0.018" instead of 0.025" thick.	LE 07.11.22	mat. thickness is acceptable this one time only	[illegible] 07-11-22	[illegible] 07/11/22	LE 07.11.22	[illegible] 07/11/22
				see attached email				

NOTE: Date & initial all entries

Jason Murdoch

From: Susanne Sheldon [ssheldon@dartaero.com]
Sent: Thursday, November 15, 2007 2:37 PM
To: 'L Lacelle'; 'David Shepherd'; 'Jason Murdoch'; 'Eric Charbonneau'
Cc: 'Leanne Elsliger'; 'Mike Petsche'; 'Dale Trepanier'
Subject: RE: tunnel mat'l

Dale is opening a corrective action to add a gauge thickness chart to QSI003 - Metal fabrication. We will also review the receiving/inspection procedure for marking the sheet metal, the thickness tolerances on sheet metal and the tolerances on the measuring instruments used. All input is welcome.
Susanne

From: L Lacelle [mailto:llacelle@dartaero.com]
Sent: November 15, 2007 2:12 PM
To: 'David Shepherd'; 'Jason Murdoch'; 'Eric Charbonneau'; 'David Shepherd'
Cc: 'Leanne Elsliger'; 'Mike Petsche'; 'Suzane Sheldon'; 'Dale Trepanier'
Subject: RE: tunnel mat'l

COMPLETELY agree!!

From: David Shepherd [mailto:dshepherd@dartaero.com]
Sent: November 15, 2007 1:41 PM
To: 'Jason Murdoch'; 'Eric Charbonneau'; 'David Shepherd'
Cc: 'Leanne Elsliger'; 'Mike Petsche'; 'L Lacelle'; 'Suzane Sheldon'; 'Dale Trepanier'
Subject: RE: tunnel mat'l

Hello all,

Just to confirm ... 0.018" is good for me ... whatever works for production ... minimum requirement is 0.015".

I think Jason's suggestion to add a gauge thickness chart to a QSI is a good idea.
The confusing thing is that it varies between stainless and carbon steel.
Maybe not QSI 017 or 018 ... perhaps the Sheet Metal Fabrication QSI.

David

From: Jason Murdoch [mailto:jmurdoch@dartaero.com]
Sent: Wednesday, November 14, 2007 3:11 PM
To: 'Eric Charbonneau'; 'David Shepherd'
Cc: 'Leanne Elsliger'; 'Mike Petsche'; 'L Lacelle'; Suzane Sheldon; 'Dale Trepanier'
Subject: RE: tunnel mat'l

Also what becomes an issue, is that the material is being identified in gauge instead of in inches. This causes workers to pull 25ga material instead of 0.025", for example. Keep in mind, workers are SUPPOSED to verify the thickness of the material before use. The use of gauge is not mentioned in QSI 017 or QSI 018 (QSI 018 does mention " dimensions are in inches " see section 4.1). If the use of gauge will continue, I find it necessary that we should have this included in the QSI, with a chart of gauge converted into inches, along with a tolerance, for each material that we use, since each is different, and approved by engineering.

jmurdoch@dartaero.com

Q.C. COORDINATOR

From: Eric Charbonneau [mailto:echarbonneau@dartaero.com]
Sent: Wednesday, November 14, 2007 3:16 PM
To: David Shepherd
Cc: Jason Murdoch; Leanne Elsliger; Mike Petsche
Subject: tunnel mat'l

Hi David, just to clarify, for some reason some 0.018" thick 304SS got identified at receiving as 0.025", waterjet operator recorded 0.022" on is FAI (depending on how you measure this is possible), the parts were audited by QC and approved by engineering on a prototype w/o, went thru the whole system unnoticed until today. I thick there is more than one department at fault in this. If you want to keep 0.025" on the drawings for the tunnel its fine we have 2 sheets in stock, I was just thinking since we already use a lot of 0.018" thick SS we could go with this and prevent this kind of mistake from happening again by standardising our material inventory.

Thanks,

Eric Charbonneau
Production Engineering Coordinator
DART *aerospace Ltd.*
T(613) 632-5200
F(613) 632-4443
echarbonneau@dartaero.com

No virus found in this incoming message.
Checked by AVG Free Edition.
Version: 7.5.503 / Virus Database: 269.15.31/1130 - Release Date: 11/14/2007 9:27 AM

No virus found in this outgoing message.
Checked by AVG Free Edition.
Version: 7.5.503 / Virus Database: 269.15.33/1132 - Release Date: 11/15/2007 9:34 AM

No virus found in this incoming message.
Checked by AVG Free Edition.
Version: 7.5.503 / Virus Database: 269.15.33/1132 - Release Date: 15/11/2007 9:34 AM

No virus found in this outgoing message.
Checked by AVG Free Edition.
Version: 7.5.503 / Virus Database: 269.15.33/1132 - Release Date: 15/11/2007 9:34 AM

Dart Aerospace Ltd.

Date: Tuesday, 11/13/2007 2:00:10 PM
User: Eric Charbonneau

Process Sheet

Customer	: CU-DAR001 Dart Helicopters Services	**Drawing Name**	: TUNNEL BOTTOM PANEL
Job Number	: 35710		
Estimate Number	: 13026		
P.O. Number	:	**Part Number**	: D3649041
This Issue	: 11/13/2007 **S.O. No.** :	**Drawing Number**	: D3649 UNDER REVIEW
Prsht Rev.	: NC	**Project Number**	: N/A
First Issue	: / / **Type** : SMALL /MED FAB	**Drawing Revision**	: U/R
Previous Run	: 35014	**Material**	:
Written By	: EC	**Due Date**	: 11/20/2007 **Qty:** 1 **Um:** Each
Checked & Approved By	:		
Comment	: Est Rev:A New Issue 07-09-26 EC verified by: DD		

Additional Product

POSITIVE RECALL

Job Number:

Seq. #:	Machine Or Operation:	Description :
1.0	M304S24GA	304/316 .025 Sheet

Comment: Qty.: 6.3725 sf(s)/Unit Total : 6.3725 sf(s)
304/316 SS sheet 24 ga (0.025" thick)
Batch: M105599 BB 07-11-9

2.0	WATER JET	FLOW WATER JET

Comment: FLOW WATER JET
1-Cut as per Dwg D3649
Dwg Rev: A
Prog Rev: A BB 07-11-09

2-Deburr if necessary BB 07-11-09 D

3.0	QC2	INSPECT PARTS AS THEY COME OFF MACHINE

Comment: INSPECT PARTS AS THEY COME OFF MACHINE BB 07-11-09 D

4.0	QC8	SECOND CHECK

Comment: SECOND CHECK 07/10/09

5.0	BRAKE NC	NC BRAKE

Comment: NC BRAKE
Form as per Dwg D3649 BB 07-11-09 D

Form: rprocess

Dart Aerospace Ltd

W/O:		WORK ORDER CHANGES					
DATE	STEP	PROCEDURE CHANGE	By	Date	Qty	Approval Chief Eng / Prod Mgr	Approval QC Inspector

Part No: _____ **PAR #:** _____ **Fault Category:** _____ **NCR:** Yes No **DQA:** _____ **Date:** _____

QA: N/C Closed: _____ **Date:** _____

NCR:		WORK ORDER NON-CONFORMANCE (NCR)						
DATE	STEP	Description of NC Section A	Corrective Action Section B			Verification Section C	Approval Chief Eng	Approval QC Inspector
			Initial Chief Eng	Action Description Chief Eng	Sign & Date			

NOTE: Date & initial all entries

Date: Tuesday, 11/13/2007 2:00:10 PM
User: Eric Charbonneau

Process Sheet

Customer: CU-DAR001 Dart Helicopters Services **Drawing Name:** TUNNEL BOTTOM PANEL

POSITIVE RECALL

Job Number: 35710 **Part Number:** D3649041

Job Number:

Seq. #:	Machine Or Operation:	Description :
6.0	QC5	INSPECT WORK TO CURRENT STEP
		IE 07-11-23
	Comment: INSPECT WORK TO CURRENT STEP	
7.0	MS210603K	Nut Plate
	Comment: Qty.: 22.0000 Each(s)/Unit Total : 22.0000 Each(s) Nut Plate	M105938
8.0	MS210623K	Nut Plate
	Comment: Qty.: 22.0000 Each(s)/Unit Total : 22.0000 Each(s) Nut Plate	M105938
9.0	MS20427M33	Rivet
	Comment: Qty.: 88.0000 Each(s)/Unit Total : 88.0000 Each(s) Rivet	M105728
10.0	SMALL FAB 1	SMALL & MEDIUM FAB RESOURCE 1
	Comment: SMALL & MEDIUM FAB RESOURCE 1 ~~1-Form dimple for MS20427M3 rivet per dwg D3649~~ ~~*********ensure dimples are on the proper side**********~~ 2-Assemble ~~nutplates~~ as per dwg D3649	07.11.23
11.0	QC5	INSPECT WORK TO CURRENT STEP
		IE 07.11.23
	Comment: INSPECT WORK TO CURRENT STEP	
12.0	PACKAGING 1	PACKAGING RESOURCE #1
	Comment: PACKAGING RESOURCE #1 Identify and stock Location:_____	CJ07/11/23 ①

Form: rprocess

Date: Tuesday, 11/13/2007 2:00:10 PM
User: Eric Charbonneau

Process Sheet

Customer: CU-DAR001 Dart Helicopters Services

Drawing Name: TUNNEL BOTTOM PANEL

POSITIVE RECALL

Job Number: 35710

Part Number: D3649041

Job Number:

Seq. #:	Machine Or Operation:	Description :
13.0	QC21	FINAL INSPECTION/W/O RELEASE

Comment: FINAL INSPECTION/W/O RELEASE

DD 07/11/27

U 07.11.27

Job Completion

POSITIVE RECALL
EFFECTIVE 07.11.23 AUTH 4
RELEASED _____ DATE _____

Form: rprocess

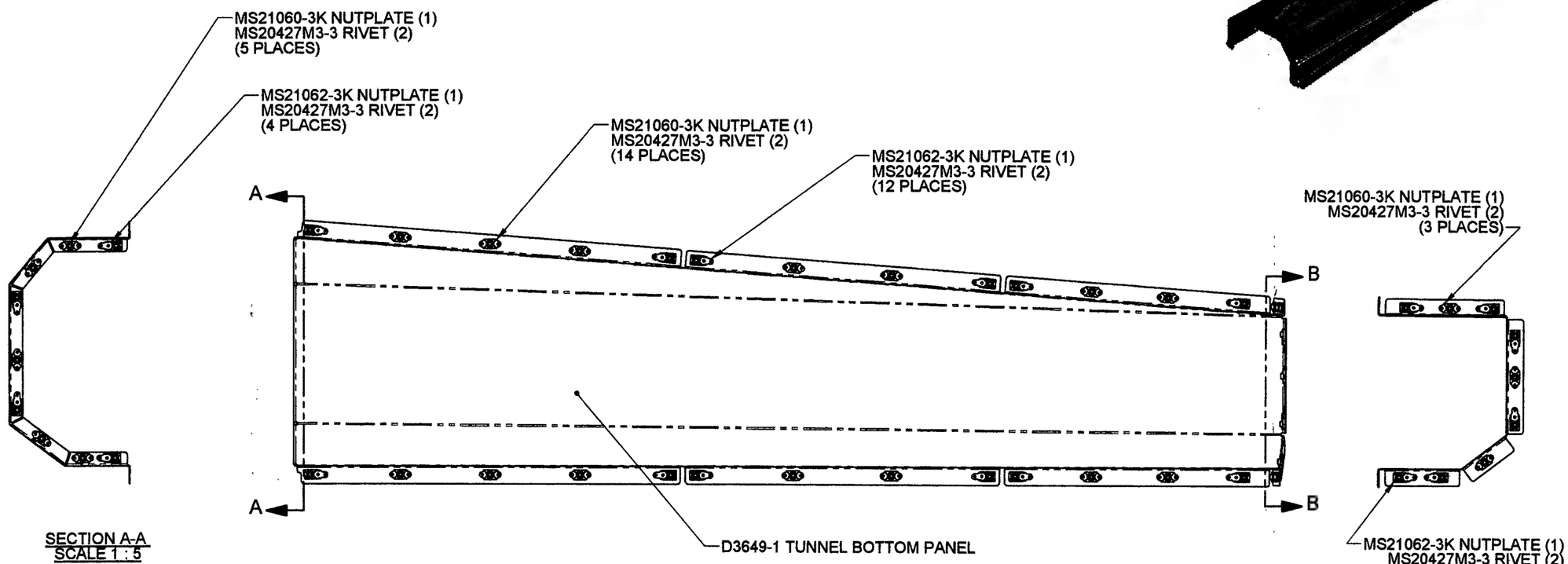

SECTION A-A
SCALE 1 : 5

SECTION B-B
SCALE 1 : 5

D3649-041 TUNNEL BOTTOM PANEL ASSY

PRELIMINARY ISSUE

PART LIST

QTY -041	PART NUMBER	DESCRIPTION
X	D3649-041	TUNNEL BOTTOM PANEL ASSY.
1	D3649-1	TUNNEL BOTTOM PANEL
88	MS20427M3-3	RIVET
22	MS21060-3K	NUTPLATE
22	MS21062-3K	NUTPLATE

REV.	DESCRIPTION	BY	DATE
A	NEW ISSUE	RF	07.11.07

DESIGN	RF	DART AEROSPACE LTD HAWKESBURY, ONTARIO, CANADA
DRAWN	RF	
CHECKED		DRAWING NO. D3649 — REV. A — SHEET 1 OF 3
MFG. APPR.		
APPROVED		TITLE: BOTTOM PANEL ASSEMBLY — SCALE 1:12
DE APPR.		
DATE	07.11.07	

COPYRIGHT © 2007 BY DART AEROSPACE LTD
THIS DOCUMENT IS PRIVATE AND CONFIDENTIAL AND IS SUPPLIED ON THE EXPRESS CONDITION THAT IT IS NOT TO BE USED FOR ANY PURPOSE OR COPIED OR COMMUNICATED TO ANY OTHER PERSON WITHOUT WRITTEN PERMISSION FROM DART AEROSPACE LTD

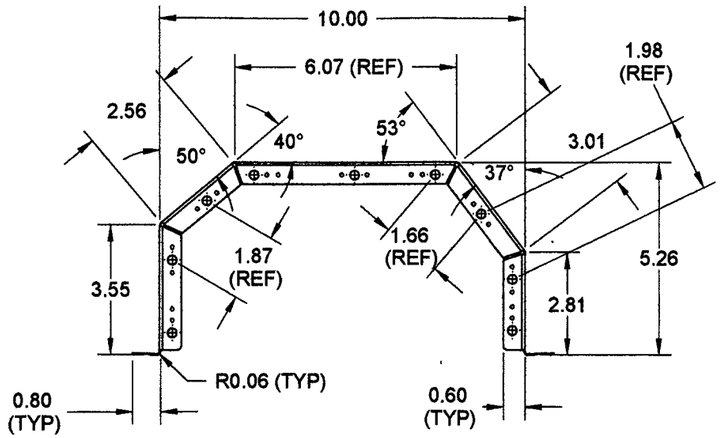

VIEW 'C' D3649-1

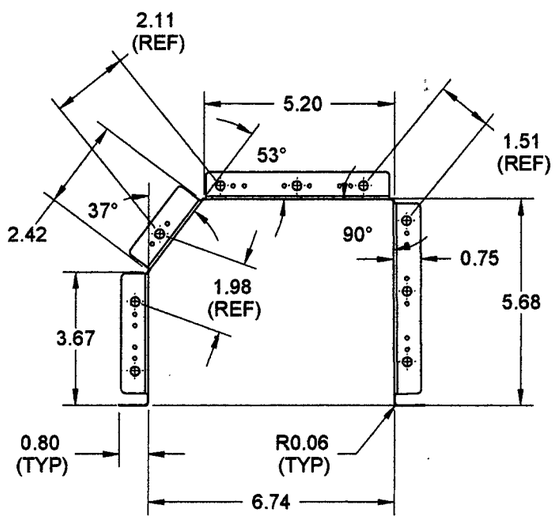

VIEW 'D' D3649-1

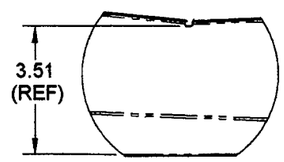

DETAIL I
SCALE 1 : 4

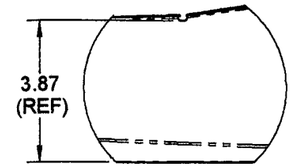

DETAIL J
SCALE 1 : 4

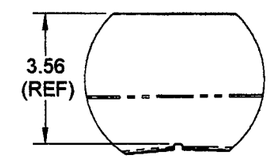

DETAIL K
SCALE 1 : 4

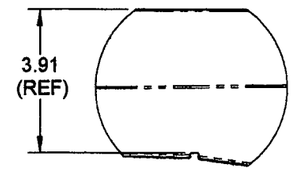

DETAIL L
SCALE 1 : 4

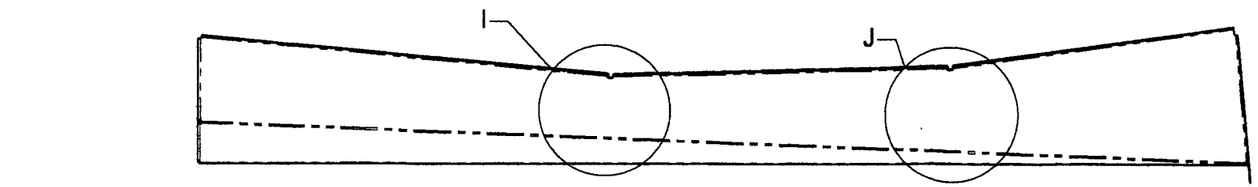

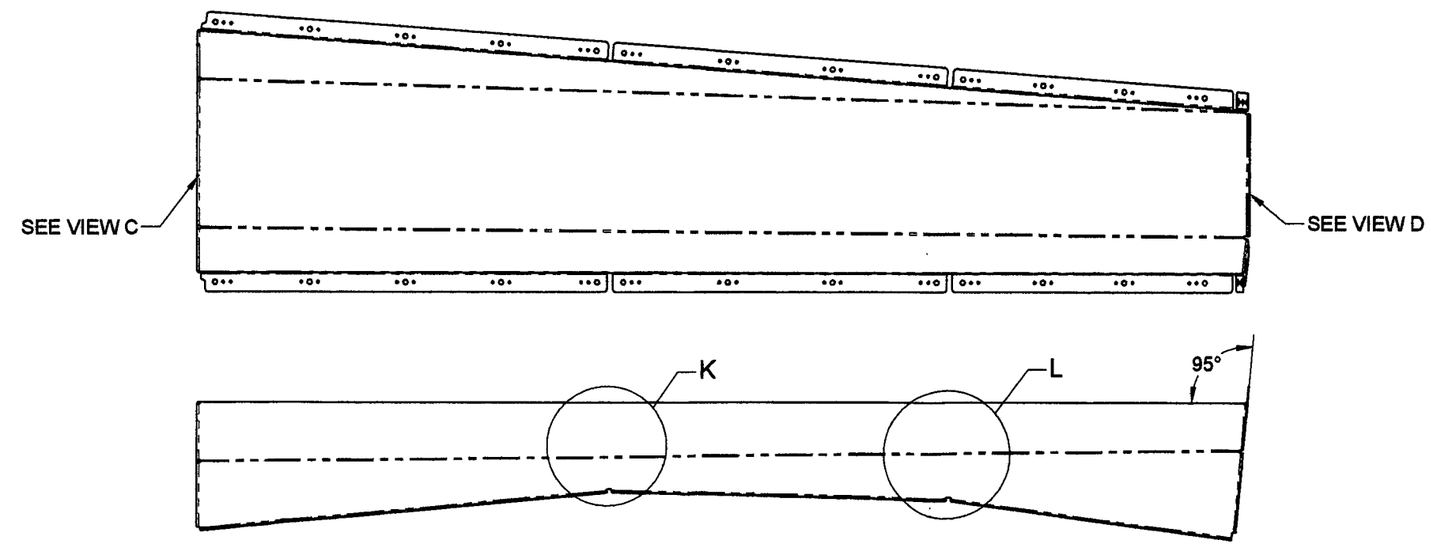

PRELIMINARY ISSUE

D3649-1 TUNNEL BOTTOM PANEL

DESIGN	RF	**DART AEROSPACE LTD** HAWKESBURY, ONTARIO, CANADA
DRAWN	RF	
CHECKED		DRAWING NO. D3649 — REV. A — SHEET 2 OF 3
MFG. APPR.		
APPROVED		TITLE BOTTOM PANEL ASSEMBLY — SCALE 1:2
DE APPR.		
DATE	07.11.07	

COPYRIGHT © 2007 BY DART AEROSPACE LTD
THIS DOCUMENT IS PRIVATE AND CONFIDENTIAL AND IS SUPPLIED ON THE EXPRESS CONDITION THAT IT IS NOT TO BE USED FOR ANY PURPOSE OR COPIED OR COMMUNICATED TO ANY OTHER PERSON WITHOUT WRITTEN PERMISSION FROM DART AEROSPACE LTD

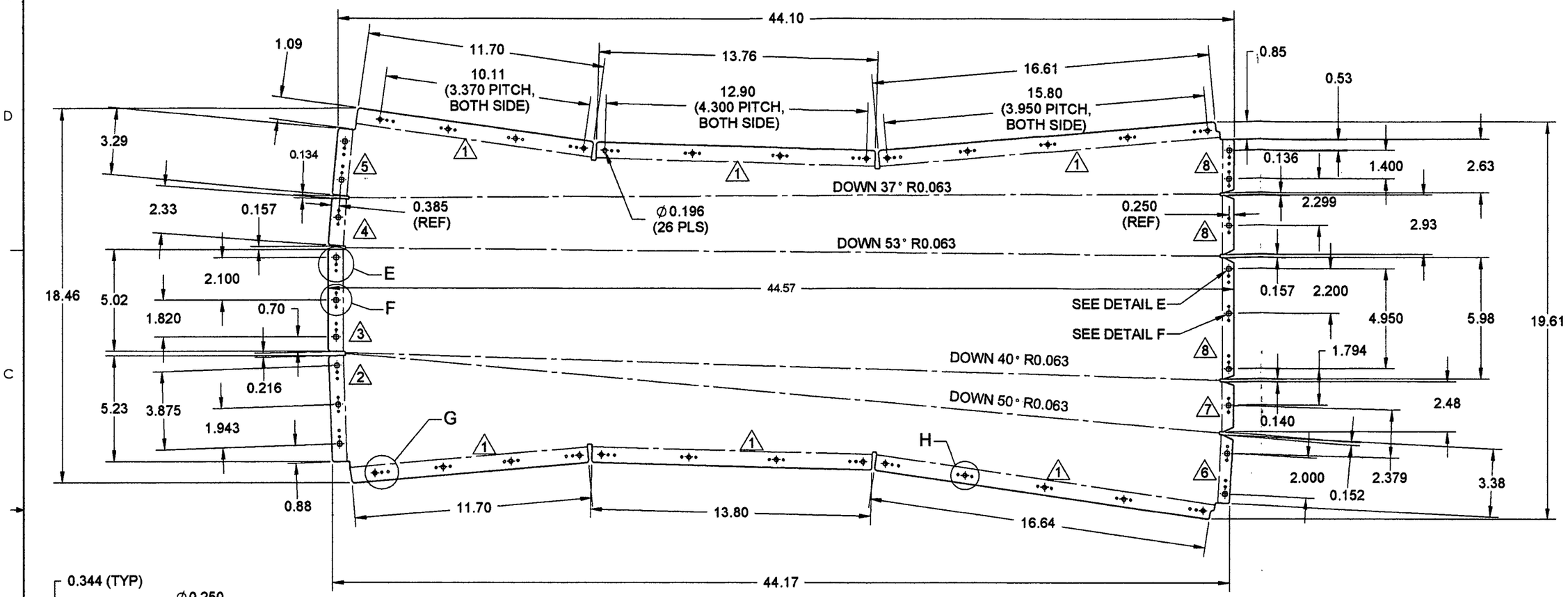

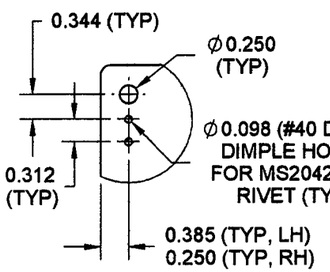

DETAIL E
SCALE 1 : 2
(10 PLS)

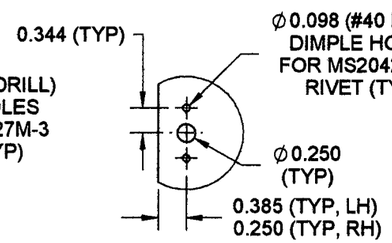

DETAIL F
SCALE 1 : 2
(8 PLS)

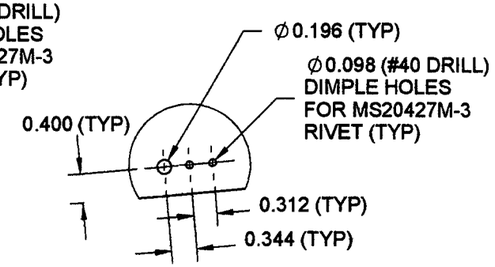

DETAIL G
SCALE 1 : 2
(12 PLS)

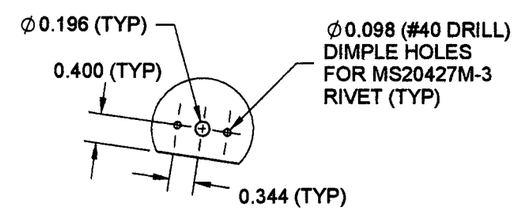

DETAIL H
SCALE 1 : 2
(14 PLS)

1. UP 90° R 0.063
2. UP 94° R 0.063
3. UP 85° R 0.063
4. UP 87° R 0.063
5. UP 90° R 0.063
6. UP 94° R 0.063
7. DOWN 91° R 0.063
8. DOWN 90° R 0.063

PRELIMINARY ISSUE

D3649-1F FLAT PATTERN

NOTES:
1) MATERIAL:AISI 304/316 STAINLESS STEEL 0.025 THICK (24 GAUGE) SHEET, PER MIL-S-5019 (REF. DART SPEC. M304S24GA)
2) FINISH: NONE
3) TOLERANCES: PER DART QSI 018 UNLESS OTHERWISE NOTED
4) UNITS: INCHES UNLESS OTHERWISE NOTED
5) BREAK SHARP EDGES: 0.005 TO 0.010 MAX
6) IDENTIFICATION: IDENTIFY WITH DART P/N "D3649-1F" USING FINE POINT PERMANENT INK MARKER
7) WEIGHT: 4.32 lbs

DESIGN	RF	DART AEROSPACE LTD HAWKESBURY, ONTARIO, CANADA
DRAWN	RF	
CHECKED		DRAWING NO. D3649 — REV. A — SHEET 3 OF 3
MFG. APPR.		
APPROVED		TITLE: BOTTOM PANEL ASSEMBLY — SCALE 1:12
DE APPR.		
DATE	07.11.07	

COPYRIGHT © 2007 BY DART AEROSPACE LTD
THIS DOCUMENT IS PRIVATE AND CONFIDENTIAL AND IS SUPPLIED ON THE EXPRESS CONDITION THAT IT IS NOT TO BE USED FOR ANY PURPOSE OR COPIED OR COMMUNICATED TO ANY OTHER PERSON WITHOUT WRITTEN PERMISSION FROM DART AEROSPACE LTD.

DART AEROSPACE LTD	Work Order:	35710 ~~3[illegible]~~
Description: TUNNEL BOTTOM PANEL	Part Number:	D3649-041
Inspection Dwg: 3649 Rev: PRE		Page 1 of 1

FIRST ARTICLE INSPECTION CHECKLIST

[X] First Article [ ] Prototype

Drawing Dimension	Tolerance	Actual Dimension	Accept	Reject	Method of Inspection	Comments
Ø .250	+.005 -.001	.255	✗			
44.17	+/- .030	44.17	✗			
44.57	+/- .030	44.57	✗			
44.10	+/- .030	44.10	✗			
11.70	+/- .030	11.70	✗			
13.76	+/- .030	13.76	✗			
16.61	+/- .030	16.61	✗			
11.70	+/- .030	11.70	✗			
13.80	+/- .030	13.80	✗			
16.64	+/- .030	16.64	✗			
3.29	+/- .030	3.29	✗			
2.33	+/- .030	2.33	✗			
5.02	+/- .030	5.02	✗			
5.23	+/- .030	5.23	✗			
18.46	+/- .030	18.46	✗			
2.63	+/- .030	2.63	✗			
2.93	+/- .030	2.925	✗			
5.48	+/- .030	5.48	✗			
2.48	+/- .030	2.475	✗			
3.38	+/- .030	3.378	✗			
19.61	+/- .030	19.61	✗			

Measured by:	LB	Audited by:	CS	Prototype Approval:	
Date:	07-10-9	Date:	07/10/09	Date:	07.10.10

Rev	Date	Change	Revised by	Approved
A		New Issue	KJ/JLM	

Date: Tuesday, 11/13/2007 2:33:42 PM
User: Eric Charbonneau

Process Sheet

Customer	: CU-DAR001 Dart Helicopters Services	**Drawing Name**	: WELDMENT TOP PANEL
Job Number	: 35708		
Estimate Number	: 13029		
P.O. Number	:	**Part Number**	: D36503
This Issue	: 11/13/2007 **S.O. No.** :	**Drawing Number**	: D3650 UNDER REVIEW
Prsht Rev.	: NC	**Project Number**	: N/A
First Issue	: 11/13/2007 **Type** : SMALL /MED FAB	**Drawing Revision**	: U/R
Previous Run	: 35148	**Material**	:
Written By	: EC	**Due Date**	: 11/20/2007 **Qty:** 1 **Um:** Each
Checked & Approved By	:		
Comment	: Est Rev:A New Issue 07-09-27 DD verified by: EC		

POSITIVE RECALL

Additional Product

Job Number:

Seq. #:	Machine Or Operation:	Description :
1.0	M304S24GA	304/316 .025 Sheet

Comment: Qty.: 1.2023 sf(s)/Unit Total : 1.2023 sf(s)
304/316 SS sheet 24 ga (0.025" thick)
Batch: 105592 HB 07-11-14

2.0	WATER JET	FLOW WATER JET

Comment: FLOW WATER JET
1-Cut as per Dwg D3650
Dwg Rev: PREL HB 07-11-14
Prog Rev: PREL.

2-Deburr if necessary HB 07-11-14

3.0	QC2	INSPECT PARTS AS THEY COME OFF MACHINE

HB 07-11-14

Comment: INSPECT PARTS AS THEY COME OFF MACHINE

4.0	QC8	SECOND CHECK

Comment: SECOND CHECK 07.11.20

5.0	BRAKE NC	NC BRAKE

Comment: NC BRAKE
Form as per Dwg D3650 07.11.22

Date: Tuesday, 11/13/2007 2:33:42 PM
User: Eric Charbonneau

Process Sheet

Customer: CU-DAR001 Dart Helicopters Services **Drawing Name:** WELDMENT TOP PANEL

Job Number: 35708 **Part Number:** D36503

Job Number:

Seq. #:	Machine Or Operation:	Description :
6.0	QC5	INSPECT WORK TO CURRENT STEP
	Comment: INSPECT WORK TO CURRENT STEP	07Jul23 AL
7.0	D365011	FILLER PLATE
	Comment: Qty.: 1.0000 (s)/Unit Total : 1.0000 (s) FILLER PLATE batch:_____	
8.0	LARGE FAB 1	LARGE FABRICATION RESOURCE 1
	Comment: LARGE FABRICATION RESOURCE 1 Weld D3650-11 filler cap as per dwg D3650	J.J.L. 07-11-23
9.0	QC9	VISUAL WELDING INSPECTION
	Comment: VISUAL WELDING INSPECTION	PD 07-11-24
10.0	PACKAGING 1	PACKAGING RESOURCE #1
	Comment: PACKAGING RESOURCE #1 Identify and stock Location:_____	07/11/23 (1)
11.0	QC21	FINAL INSPECTION/W/O RELEASE
	Comment: FINAL INSPECTION/W/O RELEASE	D 07-11-14 07-11-27

Job Completion

POSITIVE RECALL
EFFECTIVE 07-11-14 AUTH
RELEASED _____ DATE _____

ADD 10 a
10 b
10 c
SEE ATTACHED
UE 07-11-23

Form: rprocess

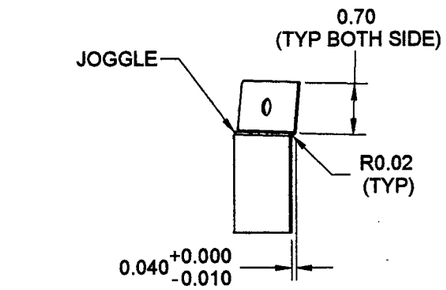

SECTION E-E
SCALE 1 : 2

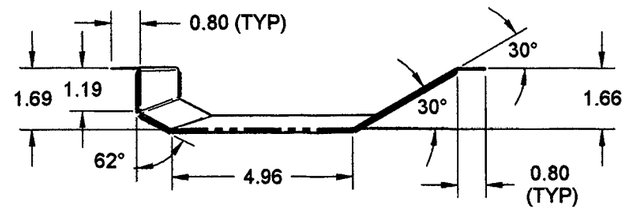

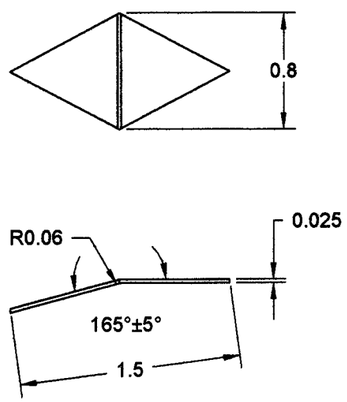

D3650-11 FILLER PLATE
(MAKE FROM D3650-3F FLAT PATTERN)

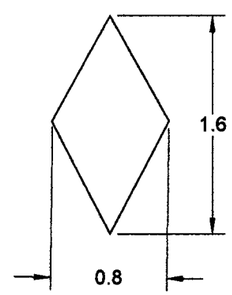

D3650-11 FLAT PATTERN

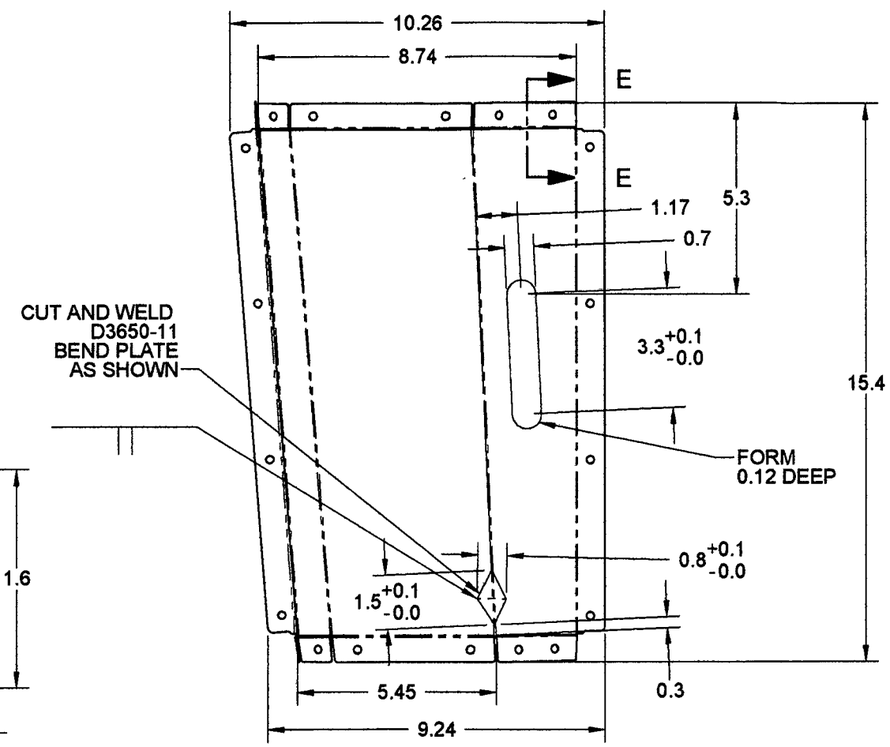

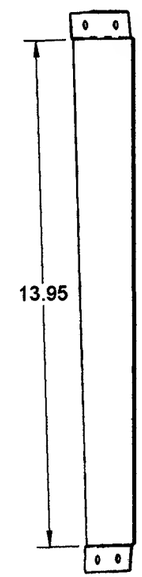

PRELIMINARY ISSUE

PART LIST

QTY -3	PART NUMBER	DESCRIPTION
X	D3650-3	CENTER PANEL
1	D3650-11	FILLER PLATE

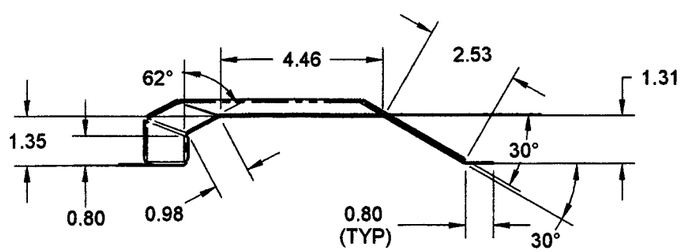

D3650-3 CENTER PANEL
(MAKE FROM D3650-3F FLAT PATTERN)

D3650-3/-011 NOTES:
1) MATERIAL: AISI 304/316 STAINLESS STEEL 0.025 THICK (24 GAUGE) SHEET, PER MIL-S-5019 (REF. SPEC. M304S24GA)
2) FINISH: NONE
3) WELD PER DART QSI 004
4) TOLERANCES: PER DART QSI 018 UNLESS OTHERWISE NOTED
5) UNITS: INCHES UNLESS OTHERWISE NOTED
6) BREAK SHARP EDGES: 0.005 TO 0.010 MAX
7) IDENTIFICATION: IDENTIFY WITH DART P/N D3650-3 USING FINE POINT PERMANENT INK MARKER
8) WEIGHT: D3650-3 (1.0 lbs)

DESIGN	RF	**DART AEROSPACE LTD** HAWKESBURY, ONTARIO, CANADA
DRAWN	RF	
CHECKED		DRAWING NO. D3650 — REV. A — SHEET 4 OF 8
MFG. APPR.		
APPROVED		TITLE: TOP PANEL ASSEMBLY — SCALE 1:4
DE APPR.		
DATE	07.11.07	

COPYRIGHT © 2007 BY DART AEROSPACE LTD
THIS DOCUMENT IS PRIVATE AND CONFIDENTIAL AND IS SUPPLIED ON THE EXPRESS CONDITION THAT IT IS NOT TO BE USED FOR ANY PURPOSE OR COPIED OR COMMUNICATED TO ANY OTHER PERSON WITHOUT WRITTEN PERMISSION FROM DART AEROSPACE LTD

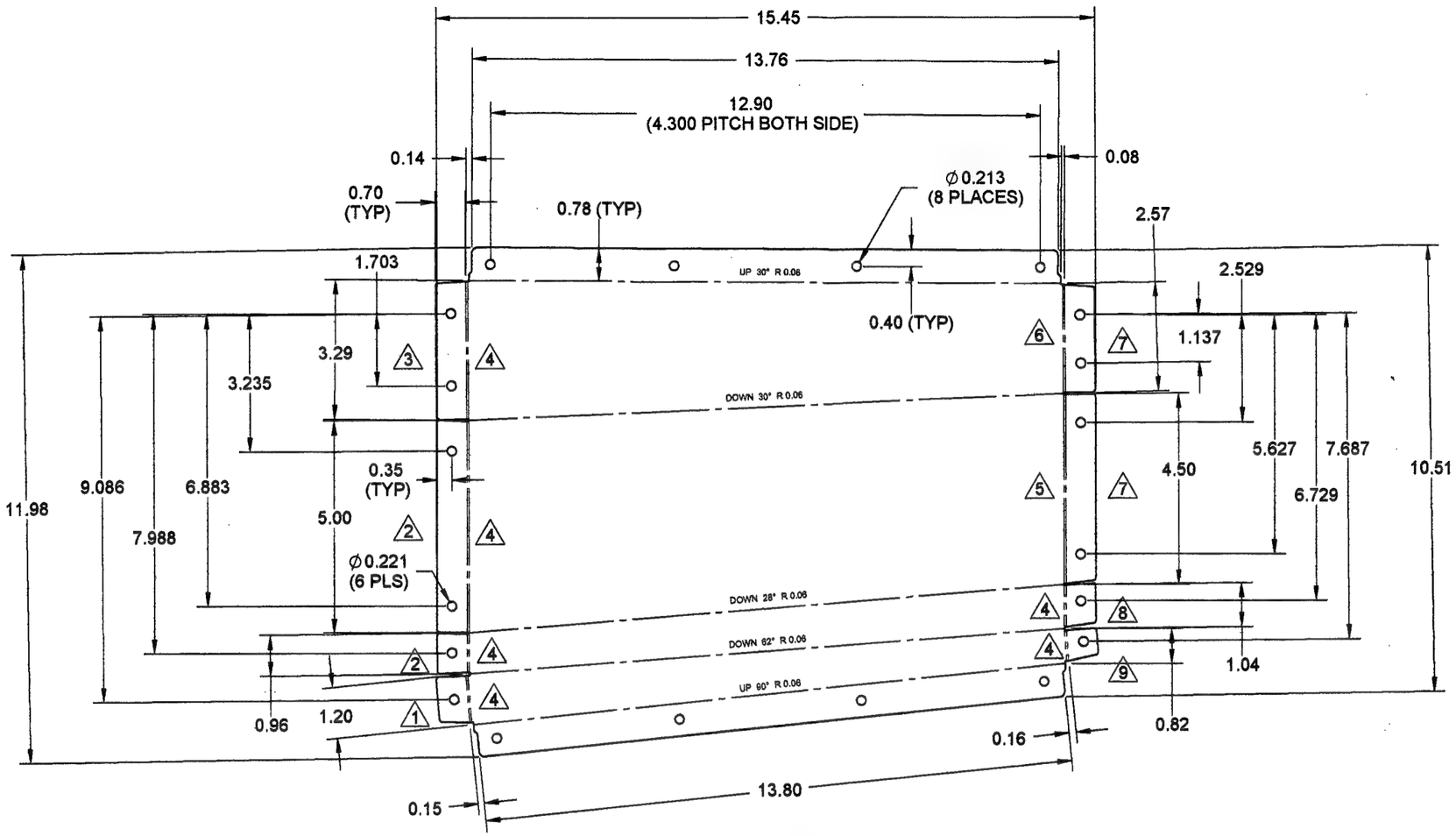

PRELIMINARY ISSUE

1. DOWN 92° R0.015
2. DOWN 89° R 0.015
3. DOWN 86° R 0.015
4. UP 90° R 0.015
5. UP 88° R 0.015
6. UP 90° R 0.015
7. DOWN 88° R 0.015
8. DOWN 90° R 0.015
9. DOWN 94° R 0.015

D3650-3F CENTER PANEL

NOTES:
1) MATERIAL: AISI 304/316 STAINLESS STEEL 0.025 THICK (24 GAUGE) SHEET, PER MIL-S-5019 (REF. DART SPEC. M304S24GA)
2) FINISH: NONE
3) TOLERANCES: PER DART QSI 018 UNLESS OTHERWISE NOTED
4) UNITS: INCHES UNLESS OTHERWISE NOTED
5) BREAK SHARP EDGES: 0.005 TO 0.010 MAX
6) IDENTIFICATION: IDENTIFY WITH DART P/N D3650-3 USING FINE POINT PERMANENT INK MARKER

DESIGN	RF	**DART AEROSPACE LTD** HAWKESBURY, ONTARIO, CANADA
DRAWN	RF	
CHECKED		DRAWING NO. D3650 — REV. A — SHEET 5 OF 8
MFG. APPR.		
APPROVED		TITLE: TOP PANEL ASSEMBLY — SCALE 1:4
DE APPR.		
DATE	07.11.07	

COPYRIGHT © 2007 BY DART AEROSPACE LTD
THIS DOCUMENT IS PRIVATE AND CONFIDENTIAL AND IS SUPPLIED ON THE EXPRESS CONDITION THAT IT IS NOT TO BE USED FOR ANY PURPOSE OR COPIED OR COMMUNICATED TO ANY OTHER PERSON WITHOUT WRITTEN PERMISSION FROM DART AEROSPACE LTD.

DART AEROSPACE LTD	Work Order:	35708
Description: WELDMENT TOP PANEL	Part Number:	D3650-3
Inspection Dwg: D3650-3 Rev: PRE L		Page 1 of 1

FIRST ARTICLE INSPECTION CHECKLIST

[X] First Article [ ] Prototype

Drawing Dimension	Tolerance	Actual Dimension	Accept	Reject	Method of Inspection	Comments
Ø .213	+ .005 - .001	.214				
15.45	+/- .030	15.45				
13.76	+/- .030	13.76				
10.51	+/- .030	10.51				
7.687	+/- .010	7.687				
6.729	+/- .010	6.729				
5.627	+/- .010	5.627				
13.80	+/- .030	13.80				
11.98	+/- .030	11.98				
9.086	+/- .010	9.086				
7.988	+/- .010	7.988				
6.883	+/- .010	6.883				
.35	+/- .030	.35				

Measured by:	JB
Date:	07-11-18

Audited by:	
Date:	07.11.20

Prototype Approval:	
Date:	

Rev	Date	Change	Revised by	Approved
A		New Issue	KJ/JLM	

Dart Aerospace Ltd

W/O:		WORK ORDER CHANGES					
DATE	STEP	PROCEDURE CHANGE	By	Date	Qty	Approval Chief Eng / Prod Mgr	Approval QC Inspector

Part No: _____ **PAR #:** _____ **Fault Category:** _____ **NCR:** Yes No **DQA:** _____ **Date:** _____

QA: N/C Closed: _____ **Date:** _____

NCR:		WORK ORDER NON-CONFORMANCE (NCR)						
DATE	STEP	Description of NC Section A	Corrective Action Section B			Verification Section C	Approval Chief Eng	Approval QC Inspector
			Initial Chief Eng	Action Description Chief Eng	Sign & Date			
07/11/23	# 1.0	wrong mat. thickness was used. 0.018" instead of 0.025"	LE 07.11.23	mat. thickness is acceptable this one time only	07.11.23 LE	07/11/23	LE 07.11.23	07/11/23

NOTE: Date & initial all entries

W/O 35708

Step 10a

VE 07.11.23 Tag with positive recall and transfer to Dart Engineering Calgary, Attention Roberto Fuentes

CL 07/11/23 ①

Step 10b

VE 07.11.23 QC5 (Upon receipt of STC)

VE Step 10c

07.11.23 Remove positive recall and release part to Eagle Copters

Date: Tuesday, 11/13/2007 4:03:53 PM
User: Eric Charbonneau

Process Sheet

Customer	: CU-DAR001 Dart Helicopters Services	**Drawing Name**	: WELDMENT TOP PANEL
Job Number	: 35709		
Estimate Number	: 13030		
P.O. Number	:	**Part Number**	: D36505
This Issue	: 11/13/2007 **S.O. No.** :	**Drawing Number**	: D3650 UNDER REVIEW
Prsht Rev.	: NC	**Project Number**	: N/A
First Issue	: 11/13/2007 **Type** : SMALL /MED FAB	**Drawing Revision**	: U/R
Previous Run	: 35149	**Material**	:
Written By	:	**Due Date**	: 11/20/2007 **Qty:** 1 **Um:** Each
Checked & Approved By	:		
Comment	: Est Rev:A New Issue 07-09-27 DD verified by: EC		

POSITIVE RECALL

Additional Product

Job Number:

Seq. #:	Machine Or Operation:	Description :
1.0	M304S24GA	304/316 .025 Sheet

Comment: Qty.: 0.8537 sf(s)/Unit Total : 0.8537 sf(s)
304/316 SS sheet 24 ga (0.025" thick)
Batch: 105592 HB 07-11-14

P/O → Last Page

2.0	WATER JET	FLOW WATER JET

Comment: FLOW WATER JET
1-Cut as per Dwg D3650
Dwg Rev: PRE . L HB 07-11-14
Prog Rev: PRE . L

2-Deburr if necessary HB 07-11-14

3.0	QC2	INSPECT PARTS AS THEY COME OFF MACHINE

HB 07-11-14

Comment: INSPECT PARTS AS THEY COME OFF MACHINE

4.0	QC8	SECOND CHECK

Comment: SECOND CHECK 07.11.20

5.0	BRAKE NC	NC BRAKE

Comment: NC BRAKE
Form as per Dwg D3650 07.11.20

Date: Tuesday, 11/13/2007 4:03:53 PM
User: Eric Charbonneau

Process Sheet

Customer: CU-DAR001 Dart Helicopters Services **Drawing Name:** WELDMENT TOP PANEL

Job Number: 35709 **Part Number:** D36505

Job Number:

Seq. #:	Machine Or Operation:	Description :
6.0	QC5	INSPECT WORK TO CURRENT STEP

VE 07.10.23

Comment: INSPECT WORK TO CURRENT STEP

7.0	D36507	SEAL

Comment: Qty.: 1.0000 Each(s)/Unit Total : 1.0000 Each(s)
SEAL
batch:_____ Cut one by hand Mat: 8168-1 M106312 7inches

8.0	D36509	ANGLE

Comment: Qty.: 1.0000 Each(s)/Unit Total : 1.0000 Each(s)
ANGLE
batch: B35015

9.0	AN960C4	WASHER

VE 07.11.23

Comment: Qty.: 12.0000 Each(s)/Unit Total : 12.0000 Each(s)
WASHER
batch:_____

PTO ~~Last~~ Pns

10.0	CR3523403	RIVET

Comment: Qty.: 12.0000 (s)/Unit Total : 12.0000 (s)
RIVET
batch: M106303

11.0	MS20427M33	Rivet

Comment: Qty.: 12.0000 Each(s)/Unit Total : 12.0000 Each(s)
Rivet
batch: M105728

12.0	MS210603K	Nut Plate

Comment: Qty.: 4.0000 Each(s)/Unit Total : 4.0000 Each(s)
Nut Plate
batch: M105938

Form: rprocess

Date: Tuesday, 11/13/2007 4:03:53 PM
User: Eric Charbonneau

Process Sheet

Customer: CU-DAR001 Dart Helicopters Services **Drawing Name:** WELDMENT TOP PANEL

Job Number: 35709 **Part Number:** D36505

Job Number:

Seq. #:	Machine Or Operation:	Description :
13.0	MS210623K	Nut Plate
	Comment: Qty.: 2.0000 Each(s)/Unit Total : 2.0000 Each(s) Nut Plate batch: M105938	
14.0	SMALL FAB 1	SMALL & MEDIUM FAB RESOURCE 1
	Comment: SMALL & MEDIUM FAB RESOURCE 1 assemble as per dwg D3650	07.11.23
15.0	QC5	INSPECT WORK TO CURRENT STEP UC 07.11.23
	Comment: INSPECT WORK TO CURRENT STEP	
16.0	PACKAGING 1	PACKAGING RESOURCE #1
	Comment: PACKAGING RESOURCE #1 Identify and stock Location:_____	CL 07/11/23
17.0	QC21	FINAL INSPECTION/W/O RELEASE
	Comment: FINAL INSPECTION/W/O RELEASE	07.11.27 UC 07.11.27

Job Completion

POSITIVE RECALL
EFFECTIVE 07.11.17 AUTH UC
RELEASED _____ DATE _____

SEE ATTACHED STEPS 16a
16b
16c
UC 07.11.22

Form: rprocess

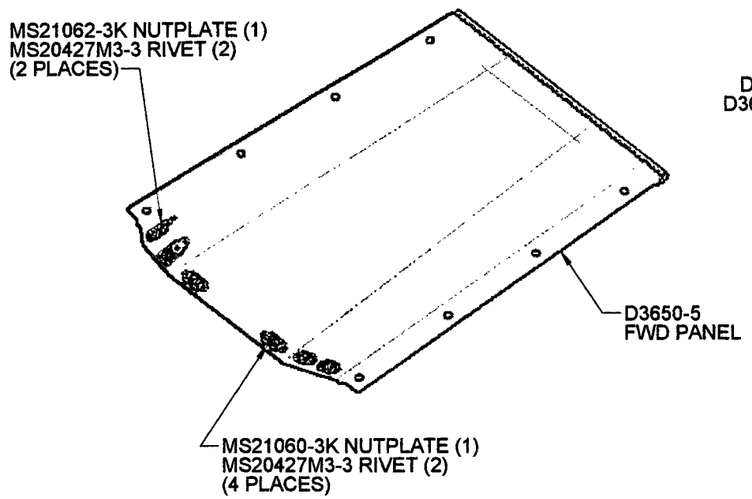

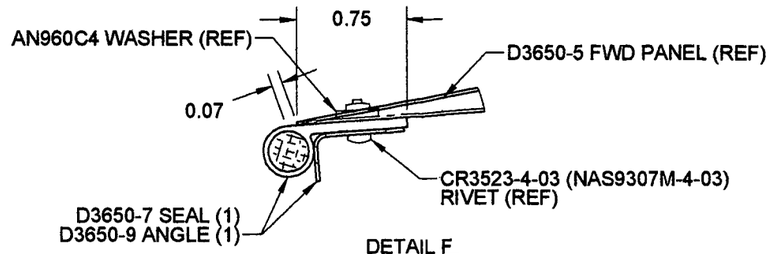

DETAIL F
SCALE 1 : 1

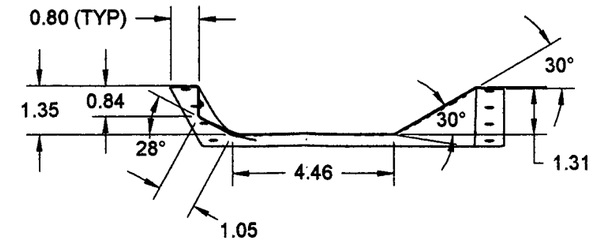

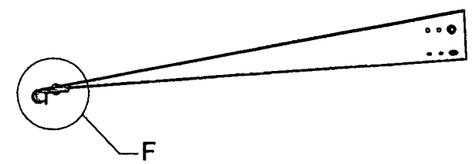

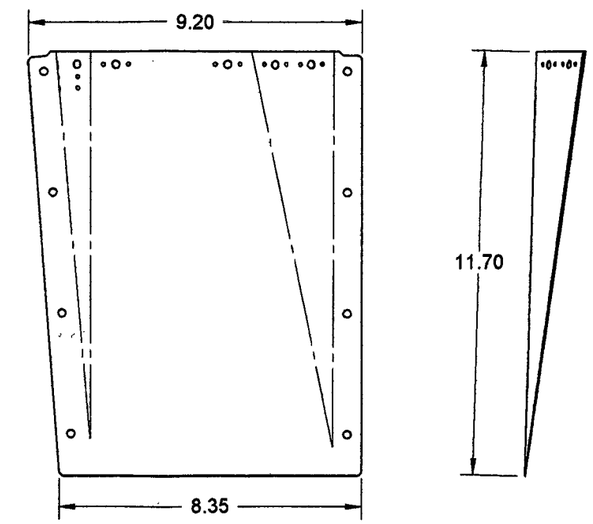

D3650-5 FWD PANEL BEND DETAIL
(MAKE FROM D3650-5F FLAT PATTERN)

PRELIMINARY ISSUE

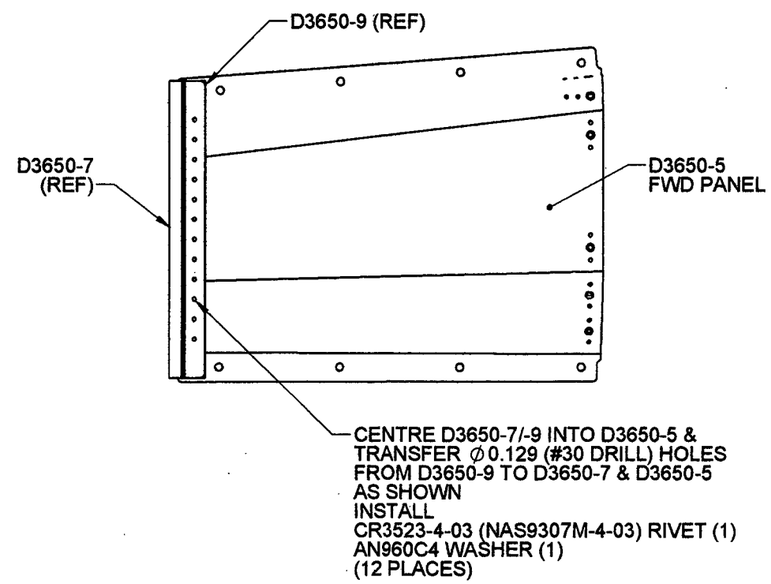

D3650-5 FWD PANEL

PART LIST

QTY -5	PART NUMBER	DESCRIPTION
X	D3650-5	FWD PANEL
1	D3650-7	SEAL
1	D3650-9	ANGLE
12	AN960C4	WASHER
12	CR3523-4-03 or NAS9307M-4-03	RIVET
12	MS20427M3-3	RIVET
4	MS21060-3K	NUTPLATE
2	MS21062-3K	NUT PLATE

PRELIMINARY ISSUE

NOTES:
1) MATERIAL: AISI 304/316 STAINLESS STEEL 0.025 THICK (24 GAUGE) SHEET, PER MIL-S-5019 (REF. DART SPEC. M304S24GA)
2) FINISH: NONE
3) TOLERANCES: PER DART QSI 018 UNLESS OTHERWISE NOTED
4) UNITS: INCHES UNLESS OTHERWISE NOTED
5) BREAK SHARP EDGES: 0.005 TO 0.010 MAX
6) IDENTIFICATION: IDENTIFY WITH DART P/N D3650-3 USING FINE POINT PERMANENT INK MARKER
7) WEIGHT: 0.8 lbs

DESIGN	RF	**DART AEROSPACE LTD** HAWKESBURY, ONTARIO, CANADA
DRAWN	RF	
CHECKED		DRAWING NO. D3650 — REV. A — SHEET 6 OF 8
MFG. APPR.		
APPROVED		TITLE: TOP PANEL ASSEMBLY — SCALE 1:4
DE APPR.		
DATE	07.11.07	

COPYRIGHT © 2007 BY DART AEROSPACE LTD
THIS DOCUMENT IS PRIVATE AND CONFIDENTIAL AND IS SUPPLIED ON THE EXPRESS CONDITION THAT IT IS NOT TO BE USED FOR ANY PURPOSE OR COPIED OR COMMUNICATED TO ANY OTHER PERSON WITHOUT WRITTEN PERMISSION FROM DART AEROSPACE LTD

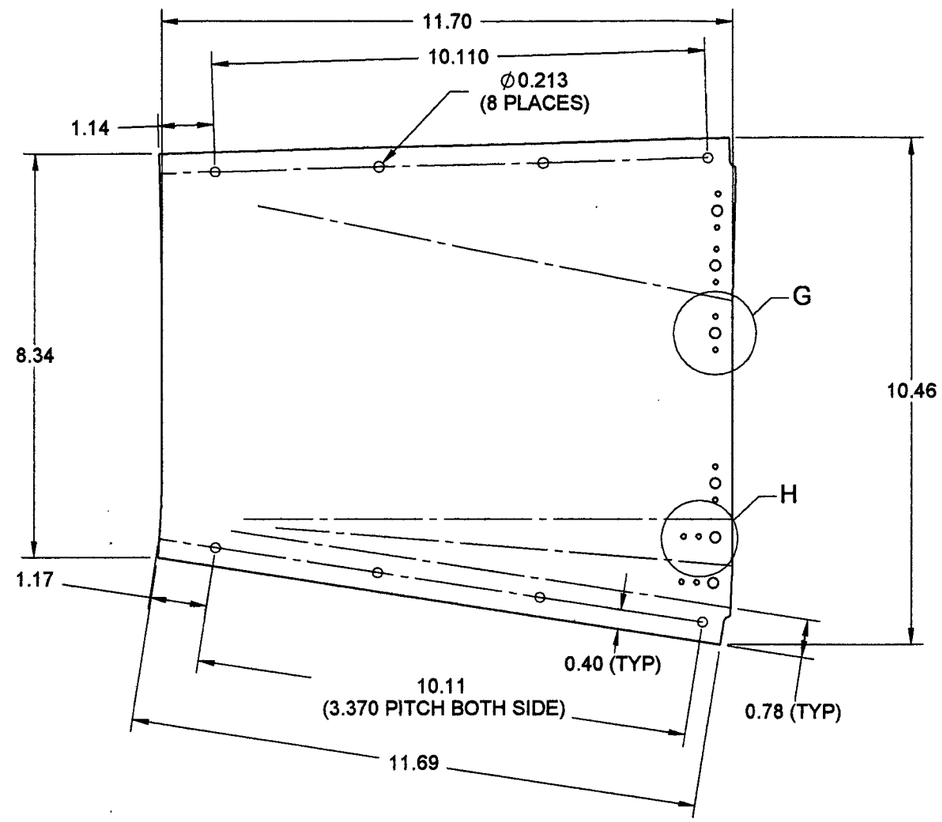

D3650-5F FLAT PATTERN

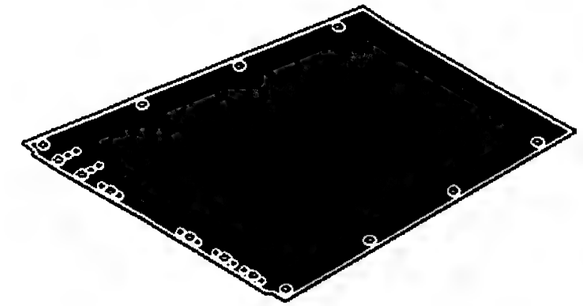

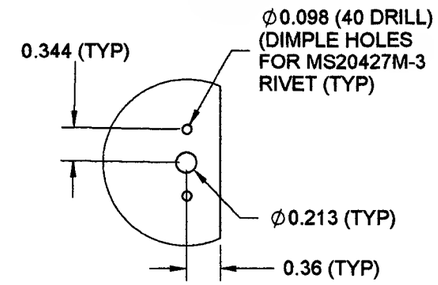

DETAIL G
SCALE 2 : 3

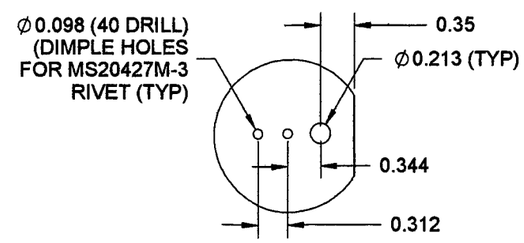

DETAIL H
SCALE 2 : 3

PRELIMINARY ISSUE

NOTES:
1) MATERIAL: AISI 304/316 STAINLESS STEEL 0.025 THICK (24 GAUGE) SHEET, PER MIL-S-5019 (REF. DART SPEC. M304S24GA)
2) FINISH: NONE
3) TOLERANCES: PER DART QSI 018 UNLESS OTHERWISE NOTED
4) UNITS: INCHES UNLESS OTHERWISE NOTED
5) BREAK SHARP EDGES: 0.005 TO 0.010 MAX
6) IDENTIFICATION: IDENTIFY WITH DART P/N D3650-5 USING FINE POINT PERMANENT INK MARKER

DESIGN	RF	**DART AEROSPACE LTD** HAWKESBURY, ONTARIO, CANADA
DRAWN	RF	
CHECKED		DRAWING NO. D3650 — REV. A — SHEET 7 OF 8
MFG. APPR.		
APPROVED		TITLE: TOP PANEL ASSEMBLY — SCALE 1:4
DE APPR.		
DATE	07.11.07	

COPYRIGHT © 2007 BY DART AEROSPACE LTD
THIS DOCUMENT IS PRIVATE AND CONFIDENTIAL AND IS SUPPLIED ON THE EXPRESS CONDITION THAT IT IS NOT TO BE USED FOR ANY PURPOSE OR COPIED OR COMMUNICATED TO ANY OTHER PERSON WITHOUT WRITTEN PERMISSION FROM DART AEROSPACE LTD

DART AEROSPACE LTD	Work Order:	35709
Description: WELDMENT TOP PANEL	Part Number:	D3650-5
Inspection Dwg: D3650-5 Rev: PRE.L		Page 1 of 1

FIRST ARTICLE INSPECTION CHECKLIST

[X] First Article [ ] Prototype

Drawing Dimension	Tolerance	Actual Dimension	Accept	Reject	Method of Inspection	Comments
Ø .213	+.005 -.001	.218				
11.69	+/- .030	11.69				
10.11	+/- .030	10.11				
10.46	+/- .030	10.46				
10.110	+/- .010	10.110				
11.70	+/- .030	11.70				
8.34	+/- .030	8.34				
1.17	+/- .030	1.17				
Ø .098	+.004 -.001	.102				
.344	+/- .010	.344				
.312	+/- .010	.312				

Measured by:	KB	Audited by:		Prototype Approval:	
Date:	07-11-14	Date:	07.11.20	Date:	

Rev	Date	Change	Revised by	Approved
A		New Issue	KJ/JLM	

W/O 35709

LE 07.11.22 Step 16a

Tag with positive recall and transfer to Dart Engineering Calgary, Attention Roberto Fuentes

CL 07/11/23

LE 07.11.22 Step 16b

QC5 (Upon receipt of STC)

LE 07.11.22 Step 16c

Remove positive recall and release part to Eagle Copters

Dart Aerospace Ltd 05

W/O:		WORK ORDER CHANGES					
DATE	**STEP**	**PROCEDURE CHANGE**	**By**	**Date**	**Qty**	**Approval** Chief Eng / Prod Mgr	**Approval** QC Inspector

Part No: _____ **PAR #:** _____ **Fault Category:** _____ **NCR:** Yes (No) **DQA:** D **Date:** 07/11/22

QA: N/C Closed: _____ **Date:** _____

NCR:		WORK ORDER NON-CONFORMANCE (NCR)						
DATE	**STEP**	**Description of NC** Section A	**Corrective Action** Section B			**Verification** Section C	**Approval** Chief Eng	**Approval** QC Inspector
			Initial Chief Eng	**Action Description** Chief Eng	**Sign & Date**			
07/11/22	# 1.0	wrong mat. was used 0.018" instead of 0.025" thick.	VE 07.11.22	mat. thickness is Acceptable this one time only	~~VE~~ ~~07.11.22~~ VE 07.11.23	07/11/22	VE 07.11.22	07/11/22
07.11.23	9.0	AN960C4 washers unavailable.	VE 07.11.23	see attached email Use M3045226A cut to 0.45" x 6.6" and transfer drill from assembly M 105262	~~VE~~ 07.11.23	VE 07.11.23	VE 07.11.23	07/11/23

NOTE: Date & initial all entries

Jason Murdoch

From: Susanne Sheldon [ssheldon@dartaero.com]
Sent: Thursday, November 15, 2007 2:37 PM
To: 'L Lacelle'; 'David Shepherd'; 'Jason Murdoch'; 'Eric Charbonneau'
Cc: 'Leanne Elsliger'; 'Mike Petsche'; 'Dale Trepanier'
Subject: RE: tunnel mat'l

Dale is opening a corrective action to add a gauge thickness chart to QSI003 - Metal fabrication. We will also review the receiving/inspection procedure for marking the sheet metal, the thickness tolerances on sheet metal and the tolerances on the measuring instruments used. All input is welcome.
Susanne

From: L Lacelle [mailto:llacelle@dartaero.com]
Sent: November 15, 2007 2:12 PM
To: 'David Shepherd'; 'Jason Murdoch'; 'Eric Charbonneau'; 'David Shepherd'
Cc: 'Leanne Elsliger'; 'Mike Petsche'; 'Suzane Sheldon'; 'Dale Trepanier'
Subject: RE: tunnel mat'l

COMPLETELY agree!!

From: David Shepherd [mailto:dshepherd@dartaero.com]
Sent: November 15, 2007 1:41 PM
To: 'Jason Murdoch'; 'Eric Charbonneau'; 'David Shepherd'
Cc: 'Leanne Elsliger'; 'Mike Petsche'; 'L Lacelle'; 'Suzane Sheldon'; 'Dale Trepanier'
Subject: RE: tunnel mat'l

Hello all,

Just to confirm ... 0.018" is good for me ... whatever works for production ... minimum requirement is 0.015".

I think Jason's suggestion to add a gauge thickness chart to a QSI is a good idea.
The confusing thing is that it varies between stainless and carbon steel.
Maybe not QSI 017 or 018 ... perhaps the Sheet Metal Fabrication QSI.

David

From: Jason Murdoch [mailto:jmurdoch@dartaero.com]
Sent: Wednesday, November 14, 2007 3:11 PM
To: 'Eric Charbonneau'; 'David Shepherd'
Cc: 'Leanne Elsliger'; 'Mike Petsche'; 'L Lacelle'; Suzane Sheldon; 'Dale Trepanier'
Subject: RE: tunnel mat'l

Also what becomes an issue, is that the material is being identified in gauge instead of in inches. This causes workers to pull 25ga material instead of 0.025", for example. Keep in mind, workers are SUPPOSED to verify the thickness of the material before use. The use of gauge is not mentioned in QSI 017 or QSI 018 (QSI 018 does mention " dimensions are in inches " see section 4.1). If the use of gauge will continue, I find it necessary that we should have this included in the QSI, with a chart of gauge converted into inches, along with a tolerance, for each material that we use, since each is different, and approved by engineering.

jmurdoch@dartaero.com

Q.C. COORDINATOR

From: Eric Charbonneau [mailto:echarbonneau@dartaero.com]
Sent: Wednesday, November 14, 2007 3:16 PM
To: David Shepherd
Cc: Jason Murdoch; Leanne Elsliger; Mike Petsche
Subject: tunnel mat'l

Hi David, just to clarify, for some reason some 0.018" thick 304SS got identified at receiving as 0.025", waterjet operator recorded 0.022" on is FAI (depending on how you measure this is possible), the parts were audited by QC and approved by engineering on a prototype w/o, went thru the whole system unnoticed until today. I thick there is more than one department at fault in this. If you want to keep 0.025" on the drawings for the tunnel its fine we have 2 sheets in stock, I was just thinking since we already use a lot of 0.018" thick SS we could go with this and prevent this kind of mistake from happening again by standardising our material inventory.

Thanks,

Eric Charbonneau
Production Engineering Coordinator
DART *aerospace Ltd.*
T(613) 632-5200
F(613) 632-4443
echarbonneau@dartaero.com

No virus found in this incoming message.
Checked by AVG Free Edition.
Version: 7.5.503 / Virus Database: 269.15.31/1130 - Release Date: 11/14/2007 9:27 AM

No virus found in this outgoing message.
Checked by AVG Free Edition.
Version: 7.5.503 / Virus Database: 269.15.33/1132 - Release Date: 11/15/2007 9:34 AM

No virus found in this incoming message.
Checked by AVG Free Edition.
Version: 7.5.503 / Virus Database: 269.15.33/1132 - Release Date: 15/11/2007 9:34 AM

No virus found in this outgoing message.
Checked by AVG Free Edition.
Version: 7.5.503 / Virus Database: 269.15.33/1132 - Release Date: 15/11/2007 9:34 AM

Dart Aerospace Ltd.

Date: Monday, 11/19/2007 9:55:54 AM
User: Eric Charbonneau

Process Sheet

Customer	: CU-DAR001 Dart Helicopters Services	**Drawing Name**	: AFT BASE ASS'Y
Job Number	: 35850		
Estimate Number	: 13043		
P.O. Number	:	**Part Number**	: D3651041
This Issue	: 11/19/2007 **S.O. No.** :	**Drawing Number**	: D3651 UNDER REVIEW
Prsht Rev.	: NC	**Project Number**	: N/A
First Issue	: / / **Type** : SMALL /MED FAB	**Drawing Revision**	: U/R
Previous Run	: 35017	**Material**	:
Written By	: E	**Due Date**	: 11/26/2007 **Qty:** 1 **Um:** Each
Checked & Approved By	:		
Comment	: Est Rev:A New Issue 07-09-27 DD verified by: EC		

POSITIVE RECALL

Additional Product

Job Number:

Seq. #:	Machine Or Operation:	Description :
1.0	PACKAGING 1	PACKAGING RESOURCE #1
	Comment: PACKAGING RESOURCE #1 Pick Packing Kit	
2.0	D3651043	FLANGE ASSEMBLY
	Comment: Qty.: 1.0000 Each(s)/Unit Total : 1.0000 Each(s) FLANGE ASSEMBLY B35846 07.11.23	
3.0	D36511	GASKET
	Comment: Qty.: 1.0000 Each(s)/Unit Total : 1.0000 Each(s) GASKET B35844	
4.0	D36519	DOUBLER
	Comment: Qty.: 1.0000 Each(s)/Unit Total : 1.0000 Each(s) DOUBLER B35847	
5.0	D365111	GASKET
	Comment: Qty.: 1.0000 Each(s)/Unit Total : 1.0000 Each(s) GASKET B35848	

Form: rprocess

Date: Monday, 11/19/2007 9:55:54 AM
User: , Eric Charbonneau

Process Sheet

Customer: CU-DAR001 Dart Helicopters Services **Drawing Name:** AFT BASE ASS'Y

Job Number: 35850 **Part Number:** D3651041

Job Number:

Seq. #:	Machine Or Operation:	Description :
6.0	D365113	DOUBLER
	Comment: Qty.: 1.0000 Each(s)/Unit Total : 1.0000 Each(s) DOUBLER	B35849
7.0	CR3523402	RIVET
	Comment: Qty.: 58.0000 Each(s)/Unit Total : 58.0000 Each(s) RIVET	M106302
8.0	SMALL FAB 1	SMALL & MEDIUM FAB RESOURCE 1
	Comment: SMALL & MEDIUM FAB RESOURCE 1	07.11.23
9.0	QC5	INSPECT WORK TO CURRENT STEP
	Comment: INSPECT WORK TO CURRENT STEP	LE 07.11.23
10.0	PACKAGING 1	PACKAGING RESOURCE #1
	Comment: PACKAGING RESOURCE #1	07/11/23 ①
11.0	QC21	FINAL INSPECTION/W/O RELEASE
	Comment: FINAL INSPECTION/W/O RELEASE	07/11/19 07.11.27

Job Completion

POSITIVE RECALL
EFFECTIVE 07.11.19 AUTH _____
RELEASED _____ DATE _____

ADD STEPS 10a
10b
10c See attached
LE 07.11.23

Form: rprocess

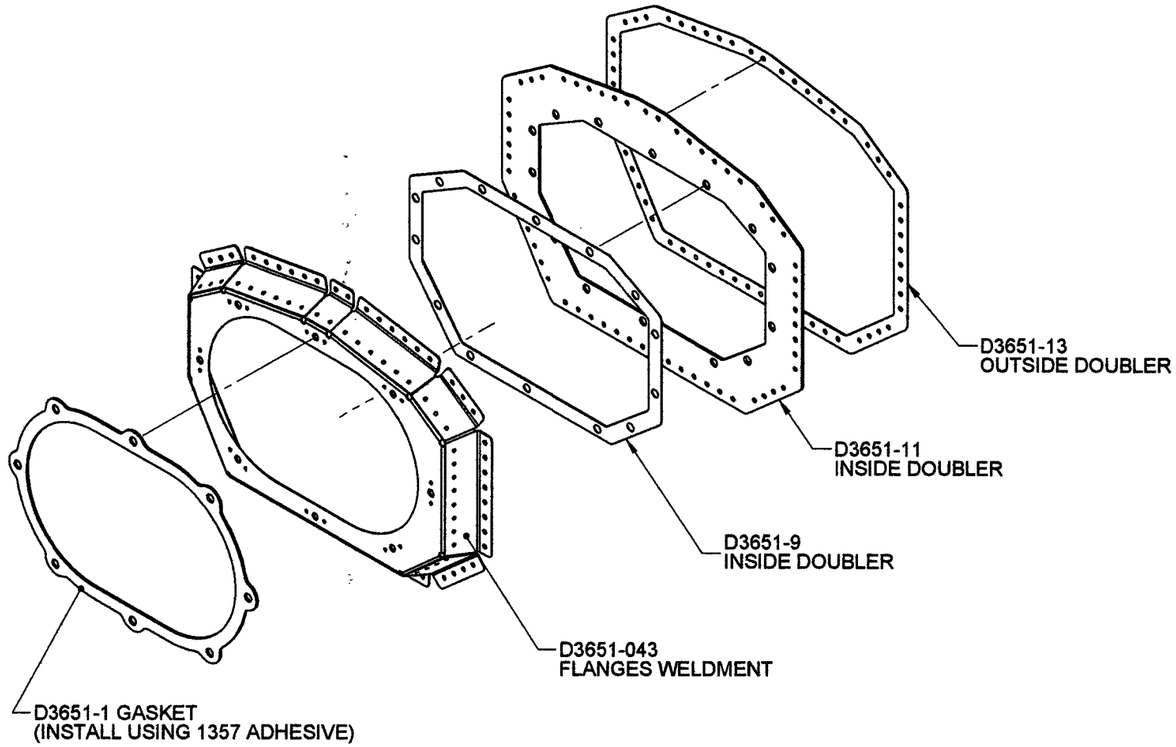

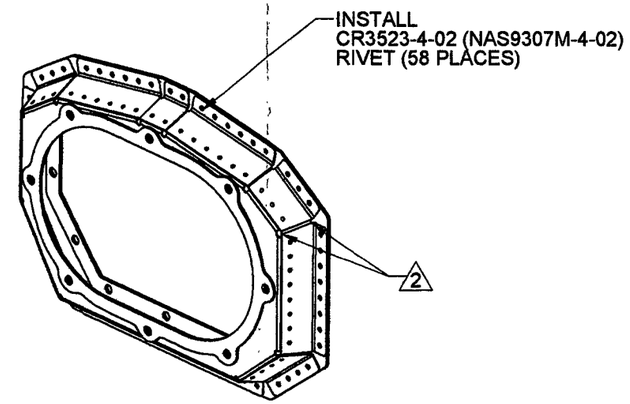

PART LIST

QTY -041	PART NUMBER	DESCRIPTION
X	D3651-041	AFT BASE ASSEMBLY ASSY.
1	D3651-043	FLANGES WELDMENT
1	D3651-1	GASKET
1	D3651-9	INSIDE DOUBLER
1	D3651-11	GASKET
1	D3651-13	OUTSIDE DOUBLER
58	CR3523-4-02 or NAS9307M-4-02	RIVET

D3651-041 AFT BASE ASSEMBLY

D3651-041 NOTES:
1) SEAL GAPS USING 3M HIGH PERFORMANCE CONTACT ADHESIVE 1357
2) TOLERANCES: PER DART QSI 018 UNLESS OTHERWISE NOTED
3) UNITS: INCHES UNLESS OTHERWISE NOTED
4) BREAK SHARP EDGES: 0.005 TO 0.010 MAX
5) IDENTIFICATION: IDENTIFY WITH DART P/N D3651-041 USING FINE POINT PERMANENT INK MARKER
6) WEIGHT: 1.62 lbs

REV.	DESCRIPTION	BY	DATE
A	NEW ISSUE	RF	07.11.07

DESIGN	RF	**DART AEROSPACE LTD** HAWKESBURY, ONTARIO, CANADA
DRAWN	RF	
CHECKED		DRAWING NO. D3651 — REV. A — SHEET 1 OF 9
MFG. APPR.		
APPROVED		TITLE: AFT BASE ASSEMBLY — SCALE 1:4
DE APPR.		
DATE	07.11.07	

COPYRIGHT © 2007 BY DART AEROSPACE LTD
THIS DOCUMENT IS PRIVATE AND CONFIDENTIAL AND IS SUPPLIED ON THE EXPRESS CONDITION THAT IT IS NOT TO BE USED FOR ANY PURPOSE OR COPIED OR COMMUNICATED TO ANY OTHER PERSON WITHOUT WRITTEN PERMISSION FROM DART AEROSPACE LTD

W/O 35850

VE 07.11.23

Step 10a

Tag with positive recall and transfer to Dart Engineering Calgary, Attention Roberto Fuentes

CL 07/11/23

VE 07.11.23

Step 10b

QC5 (Upon receipt of STC)

VE 07.11.23

Step 10c

Remove positive recall and release part to Eagle Copters

Dart Aerospace Ltd.

Date: Monday, 11/19/2007 9:25:06 AM
User: Eric Charbonneau

Process Sheet

Customer	: CU-DAR001 Dart Helicopters Services	**Drawing Name**	: FLANGE ASS'Y
Job Number	: 35846		
Estimate Number	: 13032		
P.O. Number	:	**Part Number**	: D3651043
This Issue	: 11/19/2007 **S.O. No.** :	**Drawing Number**	: D3651 UNDER REVIEW
Prsht Rev.	: NC	**Project Number**	: N/A
First Issue	: / / **Type** : SMALL /MED FAB	**Drawing Revision**	: U/R
Previous Run	: 35018	**Material**	:
Written By	:	**Due Date**	: 11/26/2007 **Qty:** 1 **Um:** Each
Checked & Approved By	:		
Comment	: Est Rev:A New Issue 07-09-27 DD verified by: EC		

POSITIVE RECALL

Additional Product

Job Number:

Seq. #:	Machine Or Operation:	Description :
1.0	M304S24GA	304/316 .025 Sheet

Comment: Qty.: 0.2573 sf(s)/Unit Total : 0.2573 sf(s)
304/316 SS sheet 24 ga (0.025" thick)
Batch: 105592 HB 07-11-19

(FOR D3651-7)

2.0	WATER JET	FLOW WATER JET

Comment: FLOW WATER JET
1-Cut as per Dwg D3651 (D3651-7)
Dwg Rev: pRE L HB 07-11-19
Prog Rev: pRE L

2

2-Deburr if necessary
IDENTIFY AS D3651-7 HB 07-11-19

3.0	QC2	INSPECT PARTS AS THEY COME OFF MACHINE

HB 07-11-19

Comment: INSPECT PARTS AS THEY COME OFF MACHINE

4.0	QC8	SECOND CHECK

Comment: SECOND CHECK HB 07-11-19 2

Form: rprocess

Date: Monday, 11/19/2007 9:25:06 AM
User: Eric Charbonneau

Process Sheet

Customer: CU-DAR001 Dart Helicopters Services **Drawing Name:** FLANGE ASS'Y

Job Number: 35846 **Part Number:** D3651043

POSITIVE RECALL

Job Number:

Seq. #:	Machine Or Operation:	Description :
5.0	M304S24GA	304/316 .025 Sheet

Comment: Qty.: 0.2573 sf(s)/Unit Total : 0.2573 sf(s)
304/316 SS sheet 24 ga (0.025" thick)
Batch: 105595
HB 07-11-14
(FOR D3651-5)

6.0	WATER JET	FLOW WATER JET

Comment: FLOW WATER JET
1-Cut as per Dwg D3651 (D3651-5)
Dwg Rev: ~~PRE~~ L
Prog Rev: ~~PRE~~ L HB 07-11-14

2-Deburr if necessary
Identify as D3651-5

7.0	QC2	INSPECT PARTS AS THEY COME OFF MACHINE

HB 07-11-14

Comment: INSPECT PARTS AS THEY COME OFF MACHINE

8.0	QC8	SECOND CHECK

Comment: SECOND CHECK HB 07.11.22 (1)

9.0	BRAKE NC	NC BRAKE

Comment: NC BRAKE
Form D3651-5 and D3651-7 as per Dwg D3651 HB 07.11.22 (1)

10.0	QC5	INSPECT WORK TO CURRENT STEP

Comment: INSPECT WORK TO CURRENT STEP 07/11/23 (X1)

11.0	LARGE FAB 1	LARGE FABRICATION RESOURCE 1

Comment: LARGE FABRICATION RESOURCE 1 J.J.L. 07/11/23
Weld assembly as per dwg D3651

Form: rprocess

Date: Monday, 11/19/2007 9:25:06 AM
User: Eric Charbonneau

Process Sheet

Customer: CU-DAR001 Dart Helicopters Services **Drawing Name:** FLANGE ASS'Y

Job Number: 35846 **Part Number:** D3651043

POSITIVE RECALL

Job Number:

Seq. #:	Machine Or Operation:	Description :
12.0	QC9	VISUAL WELDING INSPECTION
	Comment: VISUAL WELDING INSPECTION	AD 07-11-24
13.0	QC5	INSPECT WORK TO CURRENT STEP
		VE 07.11.23
	Comment: INSPECT WORK TO CURRENT STEP	
14.0	D36513	BASE
	Comment: Qty.: 1.0000 Each(s)/Unit Total : 1.0000 Each(s) BASE	B35845
15.0	MS20427M33	Rivet
	Comment: Qty.: 16.0000 Each(s)/Unit Total : 16.0000 Each(s) Rivet	M105728
16.0	MS210603K	Nut Plate
	Comment: Qty.: 8.0000 Each(s)/Unit Total : 8.0000 Each(s) Nut Plate	M105938
17.0	CR3523401	RIVET
	Comment: Qty.: 57.0000 Each(s)/Unit Total : 57.0000 Each(s) RIVET	PTO M106302
18.0	SMALL FAB 1	SMALL & MEDIUM FAB RESOURCE 1
	Comment: SMALL & MEDIUM FAB RESOURCE 1 Assemble as per dwg D3651	07.11.23
19.0	QC5	INSPECT WORK TO CURRENT STEP
	Comment: INSPECT WORK TO CURRENT STEP	VE 07.11.23

Form: rprocess

Date: Monday, 11/19/2007 9:25:06 AM
User: Eric Charbonneau

Process Sheet

Customer: CU-DAR001 Dart Helicopters Services **Drawing Name:** FLANGE ASS'Y

Job Number: 35846 **Part Number:** D3651043

Job Number:

Seq. #:	Machine Or Operation:	Description :
20.0	PACKAGING 1	PACKAGING RESOURCE #1
	Comment: PACKAGING RESOURCE #1 Identify and stock Location:_____	CL 07/11/26 ①
21.0	QC21	FINAL INSPECTION/W/O RELEASE
	Comment: FINAL INSPECTION/W/O RELEASE	D 07-11-27 VE 07.11.27

Job Completion

POSITIVE RECALL
EFFECTIVE 07.11.19 AUTH _____
RELEASED _____ DATE _____

ADD 20a
20b
20c
SEE ATTACHED
VE 07.11.23

Form: rprocess

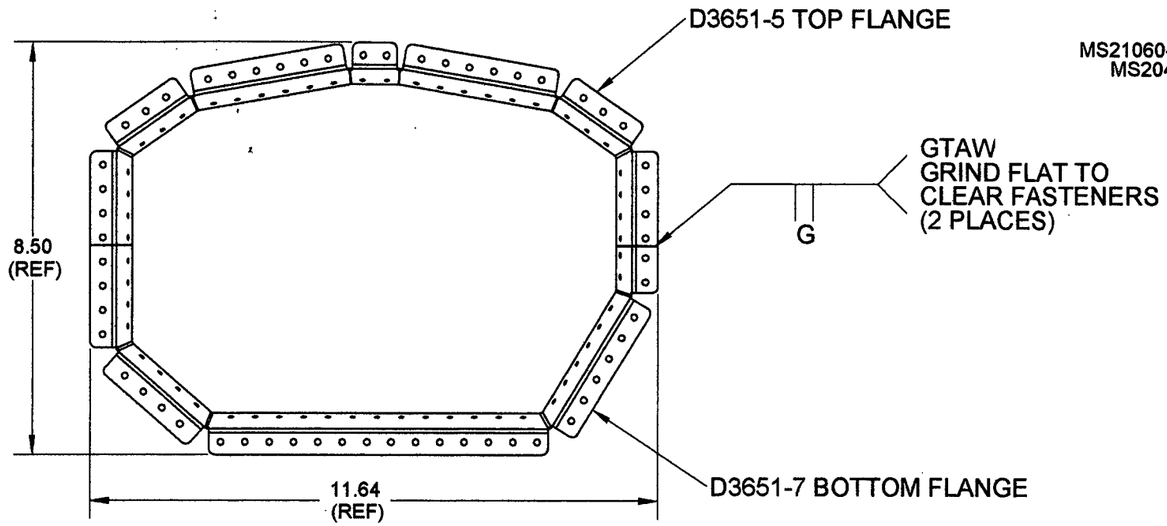

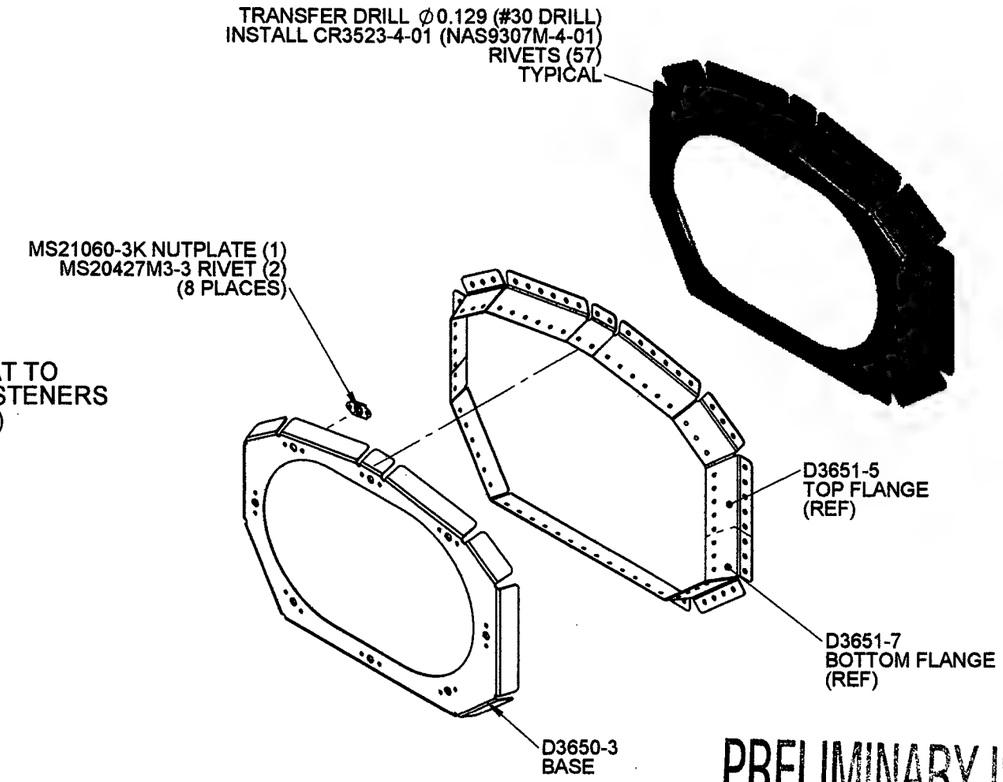

PRELIMINARY ISSUE

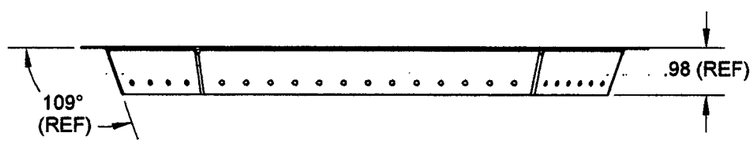

D3651-043 WELD DETAIL

D3651-043 FLANGES WELDMENT

PART LIST

QTY -043	PART NUMBER	DESCRIPTION
X	D3651-043	FLANGES WELDMENT
1	D3651-3	BASE
1	D3651-5	TOP FLANGE
1	D3651-7	BOTTOM FLANGE
16	MS20427M3-3	RIVET
8	MS21060-3K	NUTPLATE
57	CR3523-4-01 or NA9307M-4-01	RIVET

NOTES:
1) WELD PER QSI 004
2) FINISH: NONE
3) TOLERANCES: PER DART QSI 018 UNLESS OTHERWISE NOTED
4) UNITS: INCHES UNLESS OTHERWISE NOTED
5) BREAK SHARP EDGES: 0.005 TO 0.010 MAX
6) IDENTIFICATION: IDENTIFY WITH DART P/N D3651-043 USING FINE POINT PERMANENT INK MARKER
7) WEIGHT: 0.76 lbs

DESIGN	RF	**DART AEROSPACE LTD** HAWKESBURY, ONTARIO, CANADA
DRAWN	RF	
CHECKED		DRAWING NO. D3651 — REV. A — SHEET 2 OF 9
MFG. APPR.		
APPROVED		TITLE AFT BASE ASSEMBLY — SCALE 1:2
DE APPR.		
DATE	07.11.07	

COPYRIGHT © 2007 BY DART AEROSPACE LTD
THIS DOCUMENT IS PRIVATE AND CONFIDENTIAL AND IS SUPPLIED ON THE EXPRESS CONDITION THAT IT IS NOT TO BE USED FOR ANY PURPOSE OR COPIED OR COMMUNICATED TO ANY OTHER PERSON WITHOUT WRITTEN PERMISSION FROM DART AEROSPACE LTD

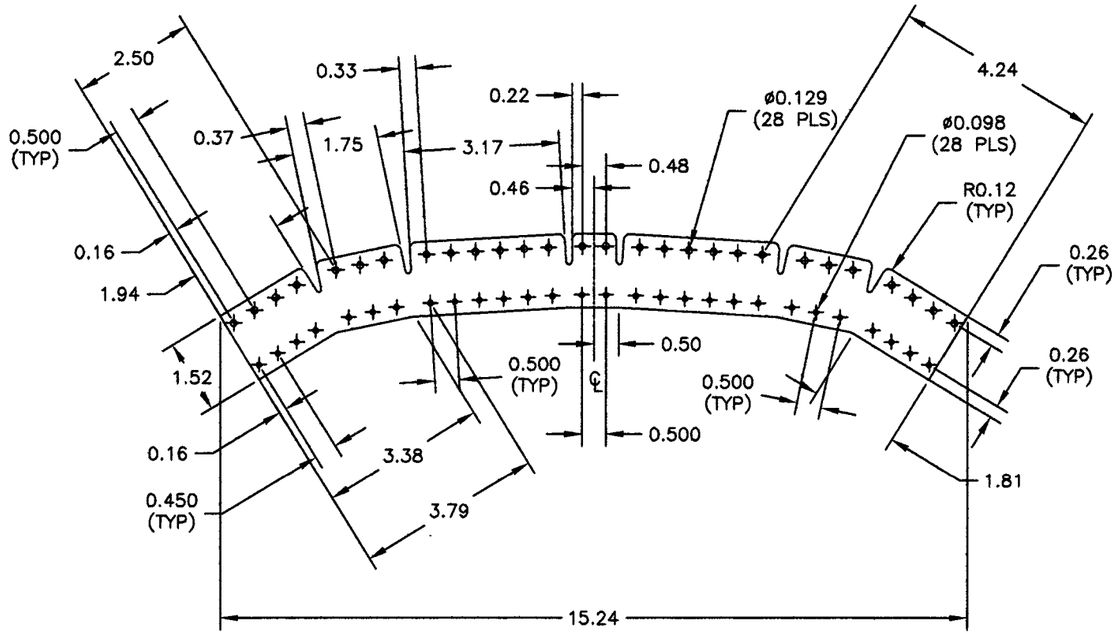

D3651-5F FLAT PATTERN

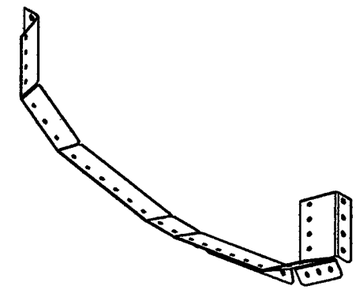

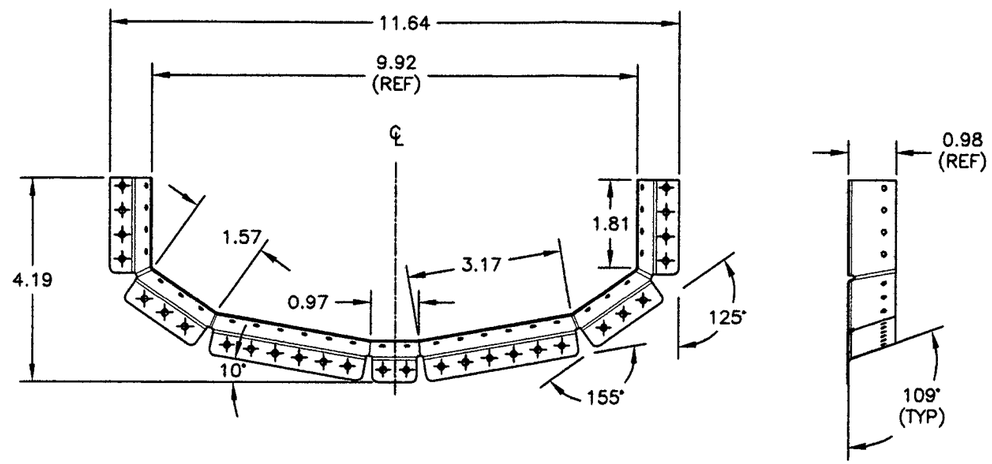

D3561-5 TOP FLANGE
(MAKE FROM D3651-5F FLAT PATTERN)

PRELIMINARY ISSUE

NOTES:
1) MATERIAL: AISI 304/316 STAINLESS STEEL 0.025 (24 GAUGE) SHEET, PER MIL-S-5019 (REF. DART SPEC. M304S24GA)
2) FINISH: NONE
3) TOLERANCES: PER DART QSI 018 UNLESS OTHERWISE NOTED
4) UNITS: INCHES UNLESS OTHERWISE NOTED
5) BREAK SHARP EDGES: 0.005 TO 0.010 MAX
6) IDENTIFICATION: IDENTIFY WITH DART P/N D3651-5 USING FINE POINT PERMANENT INK MARKER
7) WEIGHT: 0.02 lbs

DESIGN	RF	**DART AEROSPACE LTD** HAWKESBURY, ONTARIO, CANADA
DRAWN	RF	
CHECKED		DRAWING NO. REV. A
MFG. APPR.		D3651 SHEET 5 OF 9
APPROVED		TITLE SCALE
DE APPR.		AFT BASE ASSEMBLY 1:2
DATE	07.11.07	

COPYRIGHT © 2007 BY DART AEROSPACE LTD
THIS DOCUMENT IS PRIVATE AND CONFIDENTIAL AND IS SUPPLIED ON THE EXPRESS CONDITION THAT IT IS NOT TO BE USED FOR ANY PURPOSE OR COPIED OR COMMUNICATED TO ANY OTHER PERSON WITHOUT WRITTEN PERMISSION FROM DART AEROSPACE LTD.

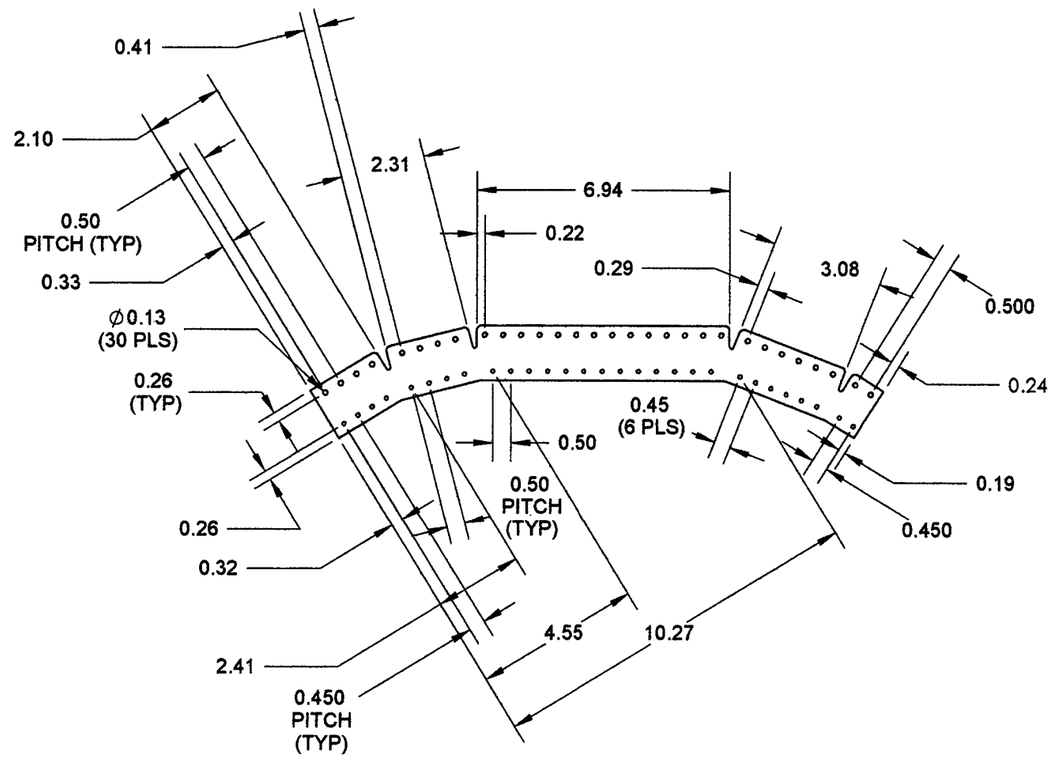

D3651-7F FLAT PATTERN

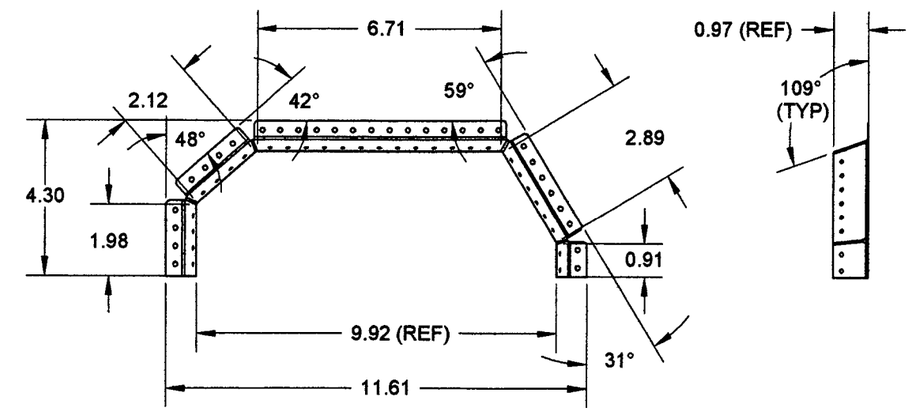

D3651-7 BOTTOM FLANGE BEND DETAIL
(MAKE FROM D3651-7 FLAT PATTERN)

PRELIMINARY ISSUE

NOTES:
1) MATERIAL: AISI 304/316 STAINLESS STEEL 0.025 (24 GAUGE) SHEET, PER MIL-S-5019 (REF. DART SPEC. M304S24GA)
2) FINISH: NONE
3) TOLERANCES: PER DART QSI 018 UNLESS OTHERWISE NOTED
4) UNITS: INCHES UNLESS OTHERWISE NOTED
5) BREAK SHARP EDGES: 0.005 TO 0.010 MAX
6) IDENTIFICATION: IDENTIFY WITH DART P/N D3651-7 USING FINE POINT PERMANENT INK MARKER
7) WEIGHT: 0.02 lbs

DESIGN	RF	**DART AEROSPACE LTD** HAWKESBURY, ONTARIO, CANADA
DRAWN	RF	
CHECKED		DRAWING NO. D3651 — REV. A — SHEET 6 OF 9
MFG. APPR.		
APPROVED		TITLE: AFT BASE ASSEMBLY — SCALE 1:4
DE APPR.		
DATE	07.11.07	

COPYRIGHT © 2007 BY DART AEROSPACE LTD
THIS DOCUMENT IS PRIVATE AND CONFIDENTIAL AND IS SUPPLIED ON THE EXPRESS CONDITION THAT IT IS NOT TO BE USED FOR ANY PURPOSE OR COPIED OR COMMUNICATED TO ANY OTHER PERSON WITHOUT WRITTEN PERMISSION FROM DART AEROSPACE LTD

DART AEROSPACE LTD	Work Order:	35846
Description: FLANGE ASS'Y	Part Number:	3651-7
Inspection Dwg: D3651-7 Rev: pre L		Page 1 of 1

FIRST ARTICLE INSPECTION CHECKLIST

[X] First Article [ ] Prototype

Drawing Dimension	Tolerance	Actual Dimension	Accept	Reject	Method of Inspection	Comments
Ø .13	+.005 -.001	.13				
.26	+/- .030	.26				
.32	+/- .030	.32				
2.10	+/- .030	2.10				
2.31	+/- .030	2.31				
6.94	+/- .030	6.94				
3.08	+/- .030	3.08				
.500	+/- .010	.500				
.24	+/- .030	.24				

Measured by:	IB
Date:	07-11-19

Audited by:	[illegible]
Date:	07.11.19

Prototype Approval:	
Date:	

Rev	Date	Change	Revised by	Approved
A		New Issue	KJ/JLM	

DART AEROSPACE LTD	Work Order:	35846
Description: FLANGE ASSY	Part Number:	D3651-~~043~~ 5
Inspection Dwg: D3651-~~23~~ 5 Rev: PREL		Page 1 of 1

FIRST ARTICLE INSPECTION CHECKLIST

[X] First Article [ ] Prototype

Drawing Dimension	Tolerance	Actual Dimension	Accept	Reject	Method of Inspection	Comments
Ø .129	+.005 -.001	.130				
15.24	+/- .030	15.24				
1.94	+/- .030	1.94				
.26	+/- .030	.26				
.500	+/- .030	.500				
.16	+/- .030	.16				
1.94	+/- .030	1.94				
1.75	+/- .030	1.75				
3.17	+/- .030	3.17				

Measured by:	HB	Audited by:	[signature]	Prototype Approval:	
Date:	07-11-19	Date:	07.11.22	Date:	

Rev	Date	Change	Revised by	Approved
A		New Issue	KJ/JLM	

Dart Aerospace Ltd.

Date: Monday, 11/19/2007 9:23:39 AM
User: Eric Charbonneau

Process Sheet

Customer	: CU-DAR001 Dart Helicopters Services	**Drawing Name**	: AFT BASE
Job Number	: 35845		
Estimate Number	: 13031		
P.O. Number	:	**Part Number**	: D36513
This Issue	: 11/19/2007 **S.O. No.** :	**Drawing Number**	: D3651 UNDER REVIEW
Prsht Rev.	: NC	**Project Number**	: N/A
First Issue	: / / **Type** : SMALL /MED FAB	**Drawing Revision**	: U/R
Previous Run	: 35020	**Material**	:
Written By	: E	**Due Date**	: 11/26/2007 **Qty:** 1 **Um:** Each
Checked & Approved By	:		
Comment	: Est Rev:A New Issue 07-09-27 DD verified by: EC		

POSITIVE RECALL

Additional Product

Job Number:

Seq. #:	Machine Or Operation:	Description :
1.0	M304S24GA	304/316 .025 Sheet

Comment: Qty.: 0.4977 sf(s)/Unit Total : 0.4977 sf(s)
304/316 SS sheet 24 ga (0.025" thick)
Batch: 105592 HB 07-11-19

(P2) Last Page

2.0	WATER JET	FLOW WATER JET

Comment: FLOW WATER JET
1-Cut as per Dwg D3651
Dwg Rev: PREL HB 07-11-19
Prog Rev: PREL
2-Deburr if necessary HB 07-11-19

(7)

3.0	QC2	INSPECT PARTS AS THEY COME OFF MACHINE

HB 07-11-19

Comment: INSPECT PARTS AS THEY COME OFF MACHINE

4.0	QC8	SECOND CHECK

Comment: SECOND CHECK

07/11/20 (x2)

5.0	BRAKE NC	NC BRAKE

Comment: NC BRAKE
Form as per Dwg D3651

07.11.20 PP

One Scrap

Form: rprocess

Date: Monday, 11/19/2007 9:23:39 AM
User: Eric Charbonneau

Process Sheet

Customer: CU-DAR001 Dart Helicopters Services **Drawing Name:** AFT BASE

Job Number: 35845 **Part Number:** D36513

Job Number:

Seq. #:	Machine Or Operation:	Description :
6.0	QC5	INSPECT WORK TO CURRENT STEP
	Comment: INSPECT WORK TO CURRENT STEP	07/11/23
7.0	PACKAGING 1	PACKAGING RESOURCE #1
	Comment: PACKAGING RESOURCE #1 Identify and stock Location:_____	07/11/23 07.11.22
8.0	QC21	FINAL INSPECTION/W/O RELEASE
	Comment: FINAL INSPECTION/W/O RELEASE	07.11.27

Job Completion 07.11.27

POSITIVE RECALL
EFFECTIVE 07.11.19 AUTH _____
RELEASED _____ DATE _____

SEE ATTACHED STEPS 7a
7b
7c
07.11.22

Form: rprocess

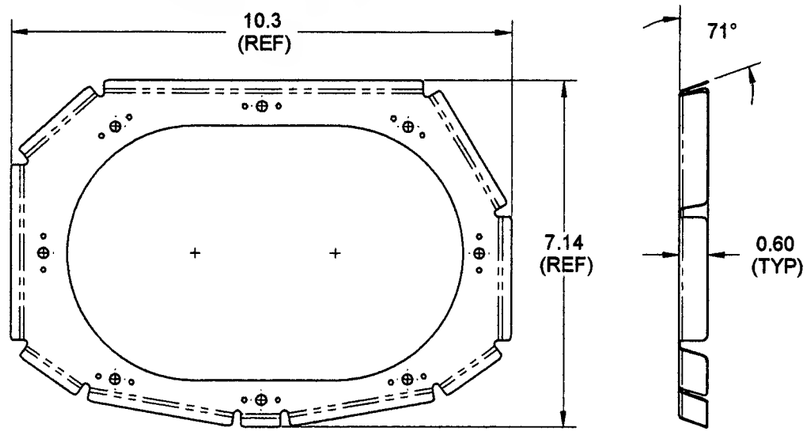

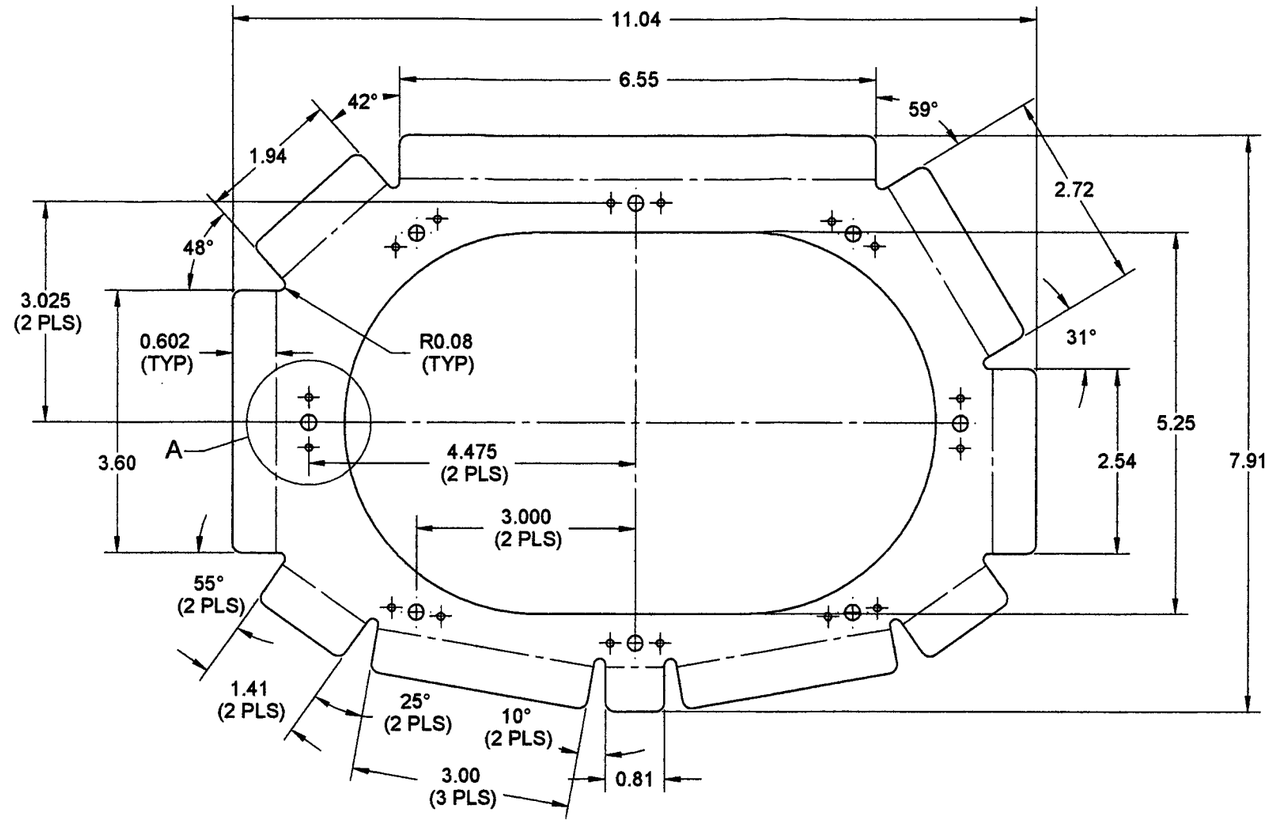

D3651-3F FLAT PATTERN

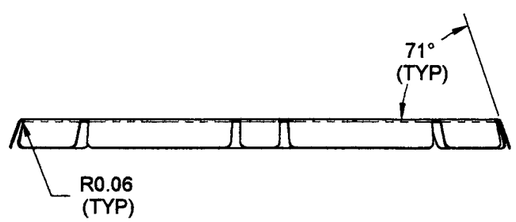

D3651-3 BASE
(MAKE FROM D3651-3F FLAT PATTERN)
SCALE 1:3

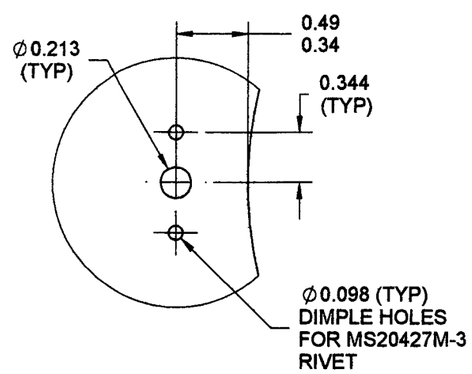

DETAIL A
SCALE 1 : 1

PRELIMINARY ISSUE

NOTES:
1) MATERIAL: AISI 304/316 STAINLESS STEEL 0.025 (24 GAUGE) SHEET, PER MIL-S-5019 (REF. DART SPEC. M304S24GA)
2) FINISH: NONE
3) TOLERANCES: PER DART QSI 018 UNLESS OTHERWISE NOTED
4) UNITS: INCHES UNLESS OTHERWISE NOTED
5) BREAK SHARP EDGES: 0.005 TO 0.010 MAX
6) IDENTIFICATION: IDENTIFY WITH DART P/N D3651-3 USING FINE POINT PERMANENT INK MARKER
7) WEIGHT: 0.27 lbs

DESIGN	RF	**DART AEROSPACE LTD** HAWKESBURY, ONTARIO, CANADA
DRAWN	RF	
CHECKED		DRAWING NO. D3651 REV. A SHEET 4 OF 9
MFG. APPR.		
APPROVED		TITLE AFT BASE ASSEMBLY SCALE 1:2
DE APPR.		
DATE 07.11.07		

COPYRIGHT © 2007 BY DART AEROSPACE LTD
THIS DOCUMENT IS PRIVATE AND CONFIDENTIAL AND IS SUPPLIED ON THE EXPRESS CONDITION THAT IT IS NOT TO BE USED FOR ANY PURPOSE OR COPIED OR COMMUNICATED TO ANY OTHER PERSON WITHOUT WRITTEN PERMISSION FROM DART AEROSPACE LTD

W/O 35845

UE 07.11.22 Step 7a

Tag with positive recall and transfer to Dart Engineering Calgary, Attention Roberto Fuentes

RL 07/11/23

UE 07.11.22 Step 7b

QC5 (Upon receipt of STC)

UE 07.11.22 Step 7c

Remove positive recall and release part to Eagle Copters

1

Dart Aerospace Ltd 45

W/O:		WORK ORDER CHANGES					
DATE	STEP	PROCEDURE CHANGE	By	Date	Qty	Approval Chief Eng / Prod Mgr	Approval QC Inspector

Part No: _____ PAR #: _____ Fault Category: _____ NCR: Yes (No) DQA: AD Date: 07/11/22

QA: N/C Closed: _____ Date: _____

NCR:		WORK ORDER NON-CONFORMANCE (NCR)						
DATE	STEP	Description of NC Section A	Corrective Action Section B			Verification Section C	Approval Chief Eng	Approval QC Inspector
			Initial Chief Eng	Action Description Chief Eng	Sign & Date			
07/11/22	#1.0	~~Mat. thickness~~ wrong mat. was used 0.018" instead of 0.025" thickness	LE 07.11.22	Mat. Thickness is Acceptable this one time only	HB 07-11-22	07/11/22	LE 07.11.22	07/11/22
				See Attached email				

NOTE: Date & initial all entries

Jason Murdoch

From: Susanne Sheldon [ssheldon@dartaero.com]
Sent: Thursday, November 15, 2007 2:37 PM
To: 'L Lacelle'; 'David Shepherd'; 'Jason Murdoch'; 'Eric Charbonneau'
Cc: 'Leanne Elsliger'; 'Mike Petsche'; 'Dale Trepanier'
Subject: RE: tunnel mat'l

Dale is opening a corrective action to add a gauge thickness chart to QSI003 - Metal fabrication. We will also review the receiving/inspection procedure for marking the sheet metal, the thickness tolerances on sheet metal and the tolerances on the measuring instruments used. All input is welcome.
Susanne

From: L Lacelle [mailto:llacelle@dartaero.com]
Sent: November 15, 2007 2:12 PM
To: 'David Shepherd'; 'Jason Murdoch'; 'Eric Charbonneau'; 'David Shepherd'
Cc: 'Leanne Elsliger'; 'Mike Petsche'; 'Suzane Sheldon'; 'Dale Trepanier'
Subject: RE: tunnel mat'l

COMPLETELY agree!!

From: David Shepherd [mailto:dshepherd@dartaero.com]
Sent: November 15, 2007 1:41 PM
To: 'Jason Murdoch'; 'Eric Charbonneau'; 'David Shepherd'
Cc: 'Leanne Elsliger'; 'Mike Petsche'; 'L Lacelle'; 'Suzane Sheldon'; 'Dale Trepanier'
Subject: RE: tunnel mat'l

Hello all,

Just to confirm ... 0.018" is good for me ... whatever works for production ... minimum requirement is 0.015".

I think Jason's suggestion to add a gauge thickness chart to a QSI is a good idea.
The confusing thing is that it varies between stainless and carbon steel.
Maybe not QSI 017 or 018 ... perhaps the Sheet Metal Fabrication QSI.

David

From: Jason Murdoch [mailto:jmurdoch@dartaero.com]
Sent: Wednesday, November 14, 2007 3:11 PM
To: 'Eric Charbonneau'; 'David Shepherd'
Cc: 'Leanne Elsliger'; 'Mike Petsche'; 'L Lacelle'; Suzane Sheldon; 'Dale Trepanier'
Subject: RE: tunnel mat'l

Also what becomes an issue, is that the material is being identified in gauge instead of in inches. This causes workers to pull 25ga material instead of 0.025", for example. Keep in mind, workers are SUPPOSED to verify the thickness of the material before use. The use of gauge is not mentioned in QSI 017 or QSI 018 (QSI 018 does mention " dimensions are in inches " see section 4.1). If the use of gauge will continue, I find it necessary that we should have this included in the QSI, with a chart of gauge converted into inches, along with a tolerance, for each material that we use, since each is different, and approved by engineering.

jmurdoch@dartaero.com

Q.C. COORDINATOR

From: Eric Charbonneau [mailto:echarbonneau@dartaero.com]
Sent: Wednesday, November 14, 2007 3:16 PM
To: David Shepherd
Cc: Jason Murdoch; Leanne Elsliger; Mike Petsche
Subject: tunnel mat'l

Hi David, just to clarify, for some reason some 0.018" thick 304SS got identified at receiving as 0.025", waterjet operator recorded 0.022" on is FAI (depending on how you measure this is possible), the parts were audited by QC and approved by engineering on a prototype w/o, went thru the whole system unnoticed until today. I thick there is more than one department at fault in this. If you want to keep 0.025" on the drawings for the tunnel its fine we have 2 sheets in stock, I was just thinking since we already use a lot of 0.018" thick SS we could go with this and prevent this kind of mistake from happening again by standardising our material inventory.

Thanks,

Eric Charbonneau
Production Engineering Coordinator
DART *aerospace Ltd.*
T(613) 632-5200
F(613) 632-4443
echarbonneau@dartaero.com

No virus found in this incoming message.
Checked by AVG Free Edition.
Version: 7.5.503 / Virus Database: 269.15.31/1130 - Release Date: 11/14/2007 9:27 AM

No virus found in this outgoing message.
Checked by AVG Free Edition.
Version: 7.5.503 / Virus Database: 269.15.33/1132 - Release Date: 11/15/2007 9:34 AM

No virus found in this incoming message.
Checked by AVG Free Edition.
Version: 7.5.503 / Virus Database: 269.15.33/1132 - Release Date: 15/11/2007 9:34 AM

No virus found in this outgoing message.
Checked by AVG Free Edition.
Version: 7.5.503 / Virus Database: 269.15.33/1132 - Release Date: 15/11/2007 9:34 AM

Dart Aerospace Ltd

W/O:	WORK ORDER CHANGES						
DATE	STEP	PROCEDURE CHANGE	By	Date	Qty	Approval Chief Eng / Prod Mgr	Approval QC Inspector

Part No: _____ **PAR #:** _____ **Fault Category:** _____ **NCR:** Yes (No) **DQA:** LD **Date:** 07/11/23

QA: N/C Closed: _____ **Date:** _____

NCR:	WORK ORDER NON-CONFORMANCE (NCR)							
DATE	STEP	Description of NC Section A	Corrective Action Section B			Verification Section C	Approval Chief Eng	Approval QC Inspector
			Initial Chief Eng	Action Description Chief Eng	Sign & Date			
07.11.23	17.0	CR3523-4-01 not available.	VE 07.11.23	use CR3523-4-02 and change dwg to this size	07.11.23	VE 07.11.23	VE 07.11.23	07/11/23

NOTE: Date & initial all entries

Dart Aerospace Ltd

W/O:		WORK ORDER CHANGES					
DATE	STEP	PROCEDURE CHANGE	By	Date	Qty	Approval Chief Eng / Prod Mgr	Approval QC Inspector

Part No: _____ PAR #: _____ Fault Category: _____ NCR: Yes (No) DQA: D Date: 07/11/23

QA: N/C Closed: _____ Date: _____

NCR:		WORK ORDER NON-CONFORMANCE (NCR)						
DATE	STEP	Description of NC Section A	Corrective Action Section B			Verification Section C	Approval Chief Eng	Approval QC Inspector
			Initial Chief Eng	Action Description Chief Eng	Sign & Date			
07/11/23	1.0 / 60	wrong mat. was used. 0.018" instead of 0.025". was pulled in two different steps	LE 07.11.23	mat. is acceptable this one time only	LE 07-11-23	07/11/23	LE 07-11-23	07/11/23

NOTE: Date & initial all entries

W/O 35846

VE 07.11.23 Step 20a

Tag with positive recall and transfer to Dart Engineering Calgary, Attention Roberto Fuentes

CL 07/11/23

VE 07.11.23 Step 20b

QC5 (Upon receipt of STC)

VE 07.11.23 Step 20c

Remove positive recall and release part to Eagle Copters

Date: Monday, 11/19/2007 9:29:37 AM
User: Eric Charbonneau

Dart Aerospace Ltd.

Process Sheet

Customer	: CU-DAR001 Dart Helicopters Services	**Drawing Name**	: AFT BASE
Job Number	: 35848		
Estimate Number	: 13036		
P.O. Number	:		
This Issue	: 11/19/2007 **S.O. No.** :	**Part Number**	: D365111
Prsht Rev.	: NC	**Drawing Number**	: D3651 UNDER REVIEW
First Issue	: / / **Type** : SMALL /MED FAB	**Project Number**	: N/A
Previous Run	: 35022	**Drawing Revision**	: U/R
Written By	:	**Material**	:
Checked & Approved By	:	**Due Date**	: 11/26/2007 **Qty:** 1 **Um:** Each
Comment	: Est Rev:A New Issue 07-09-27 DD verified by: EC		

POSITIVE RECALL

Additional Product

Job Number:

Seq. #:	Machine Or Operation:	Description :
1.0	G89	coated cloth

Comment: Qty.: 0.7203 sf(s)/Unit Total : 0.7203 sf(s)
G-89 coated cloth
Batch: m10S 928 IB 07-11-19

2.0	WATER JET	FLOW WATER JET

Comment: FLOW WATER JET
1-Cut as per Dwg D3651

Dwg Rev: pRE 2
Prog Rev: pRE 2 IB 07-11-19

2-Deburr if necessary

3.0	QC2	INSPECT PARTS AS THEY COME OFF MACHINE

IB 07-11-19

Comment: INSPECT PARTS AS THEY COME OFF MACHINE

4.0	QC8	SECOND CHECK

Comment: SECOND CHECK

IB 07.11.20

5.0	PACKAGING 1	PACKAGING RESOURCE #1

Comment: PACKAGING RESOURCE #1
Identify and stock
Location: CL 07/11/23 IB 07.11.20

Form: rprocess

DART AEROSPACE LTD	Work Order:	35849
Description: AFT BASE	Part Number:	3651-11
Inspection Dwg: 3651-11 Rev: PREL.		Page 1 of 1

FIRST ARTICLE INSPECTION CHECKLIST

[X] First Article [ ] Prototype

Drawing Dimension	Tolerance	Actual Dimension	Accept	Reject	Method of Inspection	Comments
Ø .179	+.005 -.001	.179				
Ø .250	+.006 -.001	.256				
8.50	+/- .030	8.50				
11.64	+/- .030	11.64				
8.81	+/- .030	8.81				
5.33	+/- .030	5.33				
6.50	+/- .030	6.50				
3.50	+/- .030	3.56				
1.00	+/- .030	1.06				
2.41	+/- .030	2.41				
2.50	+/- .030	2.50				
.25	+/- .030	.25				
.26	+/- .030	.26				

Measured by:		Audited by:		Prototype Approval:	
Date:	07-11-19	Date:	07-11-20	Date:	

Rev	Date	Change	Revised by	Approved
A		New Issue	KJ/JLM	

W/O 35848

VG 07.11.22 Step 5a

Tag with positive recall and transfer to Dart Engineering Calgary, Attention Roberto Fuentes

CL07/01/23

VG 07.11.22 Step 5b

QC5 (Upon receipt of STC)

VG 07.11.22 Step 5c

Remove positive recall and release part to Eagle Copters

Dart Aerospace Ltd.

Date: Monday, 11/19/2007 9:30:19 AM
User: Eric Charbonneau

Process Sheet

Customer	: CU-DAR001 Dart Helicopters Services	**Drawing Name**	: AFT BASE
Job Number	: 35849		
Estimate Number	: 13037		
P.O. Number	:	**Part Number**	: D365113
This Issue	: 11/19/2007 **S.O. No.** :	**Drawing Number**	: D3651 UNDER REVIEW
Prsht Rev.	: NC	**Project Number**	: N/A
First Issue	: / / **Type** : SMALL /MED FAB	**Drawing Revision**	: U/R
Previous Run	: 35023	**Material**	:
Written By	: EC	**Due Date**	: 11/26/2007 **Qty:** 1 **Um:** Each
Checked & Approved By	:		
Comment	: Est Rev:A New Issue 07-09-27 DD verified by: EC		

POSITIVE RECALL

Additional Product

Job Number:

Seq. #:	Machine Or Operation:	Description :
1.0	M304S24GA	304/316 .025 Sheet

Comment: Qty.: 0.7140 sf(s)/Unit Total : 0.7140 sf(s)
304/316 SS sheet 24 ga (0.025" thick) .018
Batch: 105592 HB 07-11-19

P12 → Last Page

2.0	WATER JET	FLOW WATER JET

Comment: FLOW WATER JET
1-Cut as per Dwg D3651
Dwg Rev: PRE L
Prog Rev: PREL
HB 07-11-19 (2)

2-Deburr if necessary HB 07-11-19

3.0	QC2	INSPECT PARTS AS THEY COME OFF MACHINE

HB 07-11-19

Comment: INSPECT PARTS AS THEY COME OFF MACHINE

4.0	QC8	SECOND CHECK

Comment: SECOND CHECK 8/11/20 (02)

5.0	PACKAGING 1	PACKAGING RESOURCE #1

Comment: PACKAGING RESOURCE #1
Identify and stock
Location:_____ CY07111123 (5) 07-11-20 (2)

Form: rprocess

Date: Monday, 11/19/2007 9:30:19 AM
User: Eric Charbonneau

Process Sheet

Customer: CU-DAR001 Dart Helicopters Services **Drawing Name:** AFT BASE

Job Number: 35849 **Part Number:** D365113

Job Number:

Seq. #:	Machine Or Operation:	Description :
6.0	QC21	FINAL INSPECTION/W/O RELEASE

Comment: FINAL INSPECTION/W/O RELEASE

D 07/11/27

Job Completion

W 07.11.27

POSITIVE RECALL
EFFECTIVE 07.11.19 AUTH
RELEASED _____ DATE _____

SEE ATTACHED STEPS

5a
5b
5c

LE 07.11.22

Form: rprocess

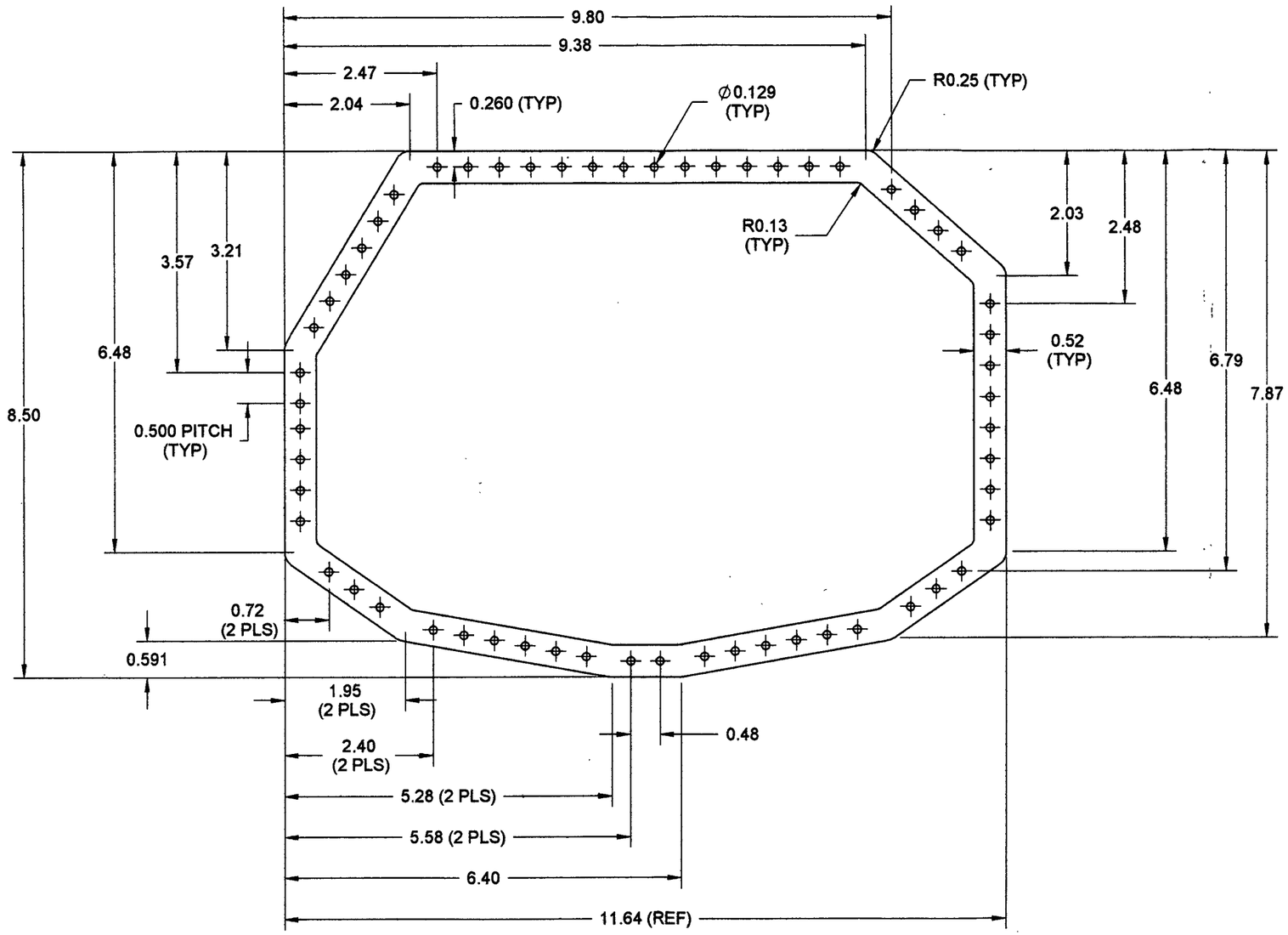

PRELIMINARY ISSUE

D3651-13 OUTSIDE DOUBLER

NOTES:
1) MATERIAL: AISI 304/316 STAINLESS STEEL 0.025 (24 GAUGE) SHEET, PER MIL-S-5019
(REF. DART SPEC. M304S24GA)
2) FINISH: NONE
3) TOLERANCES: PER DART QSI 018 UNLESS OTHERWISE NOTED
4) UNITS: INCHES UNLESS OTHERWISE NOTED
5) BREAK SHARP EDGES: 0.005 TO 0.010 MAX
6) IDENTIFICATION: IDENTIFY WITH DART P/N D3651-13 USING FINE POINT PERMANENT INK MARKER
7) WEIGHT: 0.10 lbs

DESIGN	RF	**DART AEROSPACE LTD** HAWKESBURY, ONTARIO, CANADA
DRAWN	RF	
CHECKED		DRAWING NO. D3651 — REV. A — SHEET 9 OF 9
MFG. APPR.		
APPROVED		TITLE: AFT BASE ASSEMBLY — SCALE 1:4
DE APPR.		
DATE	07.11.07	

COPYRIGHT © 2007 BY DART AEROSPACE LTD
THIS DOCUMENT IS PRIVATE AND CONFIDENTIAL AND IS SUPPLIED ON THE EXPRESS CONDITION THAT IT IS NOT TO BE USED FOR ANY PURPOSE OR COPIED OR COMMUNICATED TO ANY OTHER PERSON WITHOUT WRITTEN PERMISSION FROM DART AEROSPACE LTD

DART AEROSPACE LTD	Work Order:	35849
Description: AFT BASE	Part Number:	D3651-13
Inspection Dwg: D3651-13 Rev: PREL		Page 1 of 1

FIRST ARTICLE INSPECTION CHECKLIST

[X] First Article [ ] Prototype

Drawing Dimension	Tolerance	Actual Dimension	Accept	Reject	Method of Inspection	Comments
Ø .129	+.005 + .001	.133	X			
.260	+/- .010	.1260	X			
11.64	+/- .030	11.64	X			
8.50	+/- .030	8.50	X			
7.87	+/- .030	7.87	X			
6.79	+/- .030	6.79	X			
2.48	+/- .030	2.48	X			
2.47	+/- .030	2.47	X			
3.57	+/- .030	3.55	X			
.72	+/- .030	.72	X			
2.40	+/- .030	2.40	X			
.48	+/- .030	.48	X			
.52	+/- .030	.517	X			

Measured by:	HB
Date:	07-11-19

Audited by:	
Date:	07/11/20

Prototype Approval:	
Date:	

Rev	Date	Change	Revised by	Approved
A		New Issue	KJ/JLM	

W/O 35849

Step 5a

VE 07-11-22

Tag with positive recall and transfer to Dart Engineering Calgary, Attention Roberto Fuentes

CL 07/11/23

Step 5b

VE 07-11-22

QC5 (Upon receipt of STC)

Step 5c

VE 07-11-22

Remove positive recall and release part to Eagle Copters

Dart Aerospace Ltd 49

W/O:		WORK ORDER CHANGES					
DATE	STEP	PROCEDURE CHANGE	By	Date	Qty	Approval Chief Eng / Prod Mgr	Approval QC Inspector

Part No: _____ PAR #: _____ Fault Category: _____ NCR: Yes (No) DQA: LD Date: 07/11/27

QA: N/C Closed: _____ Date: _____

NCR:		WORK ORDER NON-CONFORMANCE (NCR)						
DATE	STEP	Description of NC Section A	Corrective Action Section B			Verification Section C	Approval Chief Eng	Approval QC Inspector
			Initial Chief Eng	Action Description Chief Eng	Sign & Date			
07/11/22	1.0	wrong mat. was used. 0.018" instead of 0.025" thickness	VE 07.11.22	mat. thickness is acceptable. This one time only	HB 07-11-22	07/11/22	VE 07.11.22	07/11/22
				see attached email				

NOTE: Date & initial all entries

Jason Murdoch

From: Susanne Sheldon [ssheldon@dartaero.com]
Sent: Thursday, November 15, 2007 2:37 PM
To: 'L Lacelle'; 'David Shepherd'; 'Jason Murdoch'; 'Eric Charbonneau'
Cc: 'Leanne Elsliger'; 'Mike Petsche'; 'Dale Trepanier'
Subject: RE: tunnel mat'l

Dale is opening a corrective action to add a gauge thickness chart to QSI003 - Metal fabrication. We will also review the receiving/inspection procedure for marking the sheet metal, the thickness tolerances on sheet metal and the tolerances on the measuring instruments used. All input is welcome.
Susanne

From: L Lacelle [mailto:llacelle@dartaero.com]
Sent: November 15, 2007 2:12 PM
To: 'David Shepherd'; 'Jason Murdoch'; 'Eric Charbonneau'; 'David Shepherd'
Cc: 'Leanne Elsliger'; 'Mike Petsche'; 'Suzane Sheldon'; 'Dale Trepanier'
Subject: RE: tunnel mat'l

COMPLETELY agree!!

From: David Shepherd [mailto:dshepherd@dartaero.com]
Sent: November 15, 2007 1:41 PM
To: 'Jason Murdoch'; 'Eric Charbonneau'; 'David Shepherd'
Cc: 'Leanne Elsliger'; 'Mike Petsche'; 'L Lacelle'; 'Suzane Sheldon'; 'Dale Trepanier'
Subject: RE: tunnel mat'l

Hello all,

Just to confirm ... 0.018" is good for me ... whatever works for production ... minimum requirement is 0.015".

I think Jason's suggestion to add a gauge thickness chart to a QSI is a good idea.
The confusing thing is that it varies between stainless and carbon steel.
Maybe not QSI 017 or 018 ... perhaps the Sheet Metal Fabrication QSI.

David

From: Jason Murdoch [mailto:jmurdoch@dartaero.com]
Sent: Wednesday, November 14, 2007 3:11 PM
To: 'Eric Charbonneau'; 'David Shepherd'
Cc: 'Leanne Elsliger'; 'Mike Petsche'; 'L Lacelle'; Suzane Sheldon; 'Dale Trepanier'
Subject: RE: tunnel mat'l

Also what becomes an issue, is that the material is being identified in gauge instead of in inches. This causes workers to pull 25ga material instead of 0.025", for example. Keep in mind, workers are SUPPOSED to verify the thickness of the material before use. The use of gauge is not mentioned in QSI 017 or QSI 018 (QSI 018 does mention " dimensions are in inches " see section 4.1). If the use of gauge will continue, I find it necessary that we should have this included in the QSI, with a chart of gauge converted into inches, along with a tolerance, for each material that we use, since each is different, and approved by engineering.

jmurdoch@dartaero.com

Q.C. COORDINATOR

From: Eric Charbonneau [mailto:echarbonneau@dartaero.com]
Sent: Wednesday, November 14, 2007 3:16 PM
To: David Shepherd
Cc: Jason Murdoch; Leanne Elsliger; Mike Petsche
Subject: tunnel mat'l

Hi David, just to clarify, for some reason some 0.018" thick 304SS got identified at receiving as 0.025", waterjet operator recorded 0.022" on is FAI (depending on how you measure this is possible), the parts were audited by QC and approved by engineering on a prototype w/o, went thru the whole system unnoticed until today. I thick there is more than one department at fault in this. If you want to keep 0.025" on the drawings for the tunnel its fine we have 2 sheets in stock, I was just thinking since we already use a lot of 0.018" thick SS we could go with this and prevent this kind of mistake from happening again by standardising our material inventory.

Thanks,

Eric Charbonneau
Production Engineering Coordinator
DART *aerospace Ltd.*
T(613) 632-5200
F(613) 632-4443
echarbonneau@dartaero.com

No virus found in this incoming message.
Checked by AVG Free Edition.
Version: 7.5.503 / Virus Database: 269.15.31/1130 - Release Date: 11/14/2007 9:27 AM

No virus found in this outgoing message.
Checked by AVG Free Edition.
Version: 7.5.503 / Virus Database: 269.15.33/1132 - Release Date: 11/15/2007 9:34 AM

No virus found in this incoming message.
Checked by AVG Free Edition.
Version: 7.5.503 / Virus Database: 269.15.33/1132 - Release Date: 15/11/2007 9:34 AM

No virus found in this outgoing message.
Checked by AVG Free Edition.
Version: 7.5.503 / Virus Database: 269.15.33/1132 - Release Date: 15/11/2007 9:34 AM

Dart Aerospace Ltd.

Date: Monday, 11/19/2007 9:29:04 AM
User: Eric Charbonneau

Process Sheet

Customer	: CU-DAR001 Dart Helicopters Services	**Drawing Name**	: AFT BASE
Job Number	: 35847		
Estimate Number	: 13033		
P.O. Number	:	**Part Number**	: D36519
This Issue	: 11/19/2007 **S.O. No.** :	**Drawing Number**	: D3651 UNDER REVIEW
Prsht Rev.	: NC	**Project Number**	: N/A
First Issue	: / / **Type** : SMALL /MED FAB	**Drawing Revision**	: U/R
Previous Run	: 35021	**Material**	:
Written By	: EC	**Due Date**	: 11/26/2007 **Qty:** 1 **Um:** Each
Checked & Approved By	:		
Comment	: Est Rev:A New Issue 07-09-27 DD verified by: EC		

POSITIVE RECALL

Additional Product

Job Number:

Seq. #:	Machine Or Operation:	Description :
1.0	M304S24GA	304/316 .025 Sheet

Comment: Qty.: 0.4526 sf(s)/Unit Total : 0.4526 sf(s)
304/316 SS sheet 24 ga (0.025" thick)
Batch: 105592 IB 07-11-19

Pho Last Page

2.0	WATER JET	FLOW WATER JET

Comment: FLOW WATER JET
1-Cut as per Dwg D3651
Dwg Rev: PREL IB 07-11-19
Prog Rev: PREL
2-Deburr if necessary IB 07-11-19

3.0	QC2	INSPECT PARTS AS THEY COME OFF MACHINE

IB 07-11-19

Comment: INSPECT PARTS AS THEY COME OFF MACHINE

4.0	QC8	SECOND CHECK

Comment: SECOND CHECK 07/11/20 (x2)

5.0	PACKAGING 1	PACKAGING RESOURCE #1

Comment: PACKAGING RESOURCE #1
Identify and stock
Location:_____ CL 07/11/23 IB 07.11.20

Form: rprocess

Date: Monday, 11/19/2007 9:29:04 AM
User: Eric Charbonneau

Process Sheet

Customer: CU-DAR001 Dart Helicopters Services

Drawing Name: AFT BASE

Job Number: 35847

Part Number: D36519

Job Number:

Seq. #:	Machine Or Operation:	Description :
6.0	QC21	FINAL INSPECTION/W/O RELEASE

Comment: FINAL INSPECTION/W/O RELEASE

D 07/11/27

Job Completion

U 07/11/27

POSITIVE RECALL
EFFECTIVE 07.11.19 AUTH
RELEASED _____ DATE _____

SEE ATTACHED STEPS

5a
5b
5c

UE 07.11.22

Form: rprocess

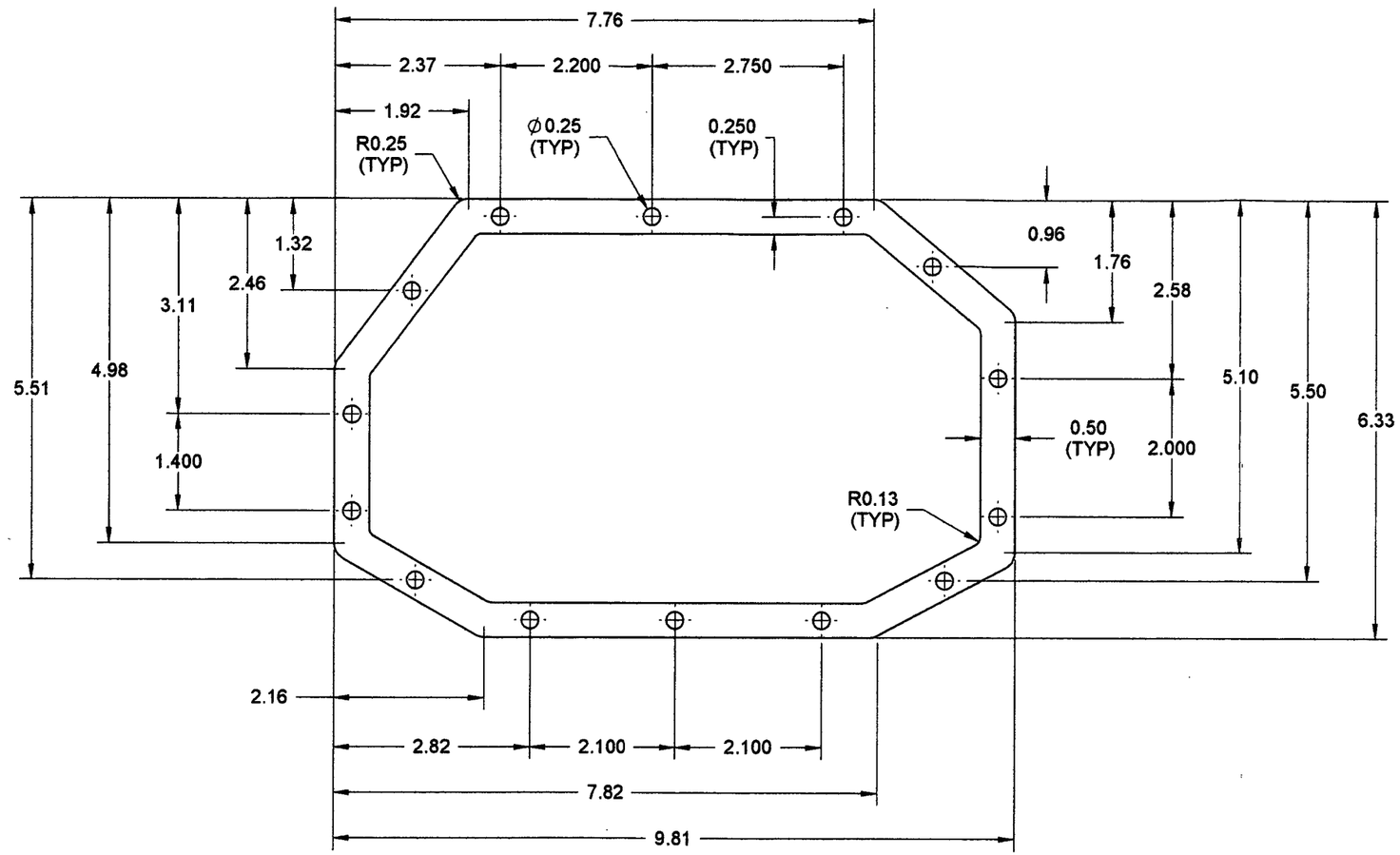

D3651-9 INSIDE DOUBLER

PRELIMINARY ISSUE

NOTES:
1) MATERIAL: AISI 304/316 STAINLESS STEEL 0.025 (24 GAUGE) SHEET, PER MIL-S-5019
(REF. DART SPEC. M304S24GA)
2) FINISH: NONE
3) TOLERANCES: PER DART QSI 018 UNLESS OTHERWISE NOTED
4) UNITS: INCHES UNLESS OTHERWISE NOTED
5) BREAK SHARP EDGES: 0.005 TO 0.010 MAX
6) IDENTIFICATION: IDENTIFY WITH DART P/N D3651-9 USING FINE POINT PERMANENT INK MARKER
7) WEIGHT: 0.07 lbs

DESIGN	RF	**DART AEROSPACE LTD** HAWKESBURY, ONTARIO, CANADA
DRAWN	RF	
CHECKED		DRAWING NO. D3651 — REV. A — SHEET 7 OF 9
MFG. APPR.		
APPROVED		TITLE: AFT BASE ASSEMBLY — SCALE 1:4
DE APPR.		
DATE	07.11.07	

COPYRIGHT © 2007 BY DART AEROSPACE LTD
THIS DOCUMENT IS PRIVATE AND CONFIDENTIAL AND IS SUPPLIED ON THE EXPRESS CONDITION THAT IT IS NOT TO BE USED FOR ANY PURPOSE OR COPIED OR COMMUNICATED TO ANY OTHER PERSON WITHOUT WRITTEN PERMISSION FROM DART AEROSPACE LTD

DART AEROSPACE LTD	Work Order:	35847
Description: AFT BASE	Part Number:	D3651-9
Inspection Dwg: D3651-9 Rev: pRE. L		Page 1 of 1

FIRST ARTICLE INSPECTION CHECKLIST

[X] First Article [ ] Prototype

Drawing Dimension	Tolerance	Actual Dimension	Accept	Reject	Method of Inspection	Comments
Ø .25	+.005 -.001	.253	X			
9.81	+/- .030	9.81	X			
6.33	+/- .030	6.33	X			
2.100	+/- .010	2.100	X			
2.82	+/- .030	2.82	X			
5.50	+/- .030	5.50	X			
5.10	+/- .030	5.10	X			
2.00	+/- .030	2.00	X			
2.58	+/- .030	2.58	X			
1.76	+/- .030	1.76	X			
.96	+/- .030	.96	X			
.250	+/- .010	.250	X			
2.750	+/- .010	2.750	X			
2.200	+/- .010	2.200	X			
1.32	+/- .030	1.32	X			
3.11	+/- .030	3.11	X			
1.40	+/- .030	1.40	X			
5.51	+/- .030	5.51	X			

Measured by:	LB
Date:	07-11-19

Audited by:	[illegible]
Date:	07/11/20

Prototype Approval:	[illegible]
Date:	[illegible]

Rev	Date	Change	Revised by	Approved
A		New Issue	KJ/JLM	

W/O 35847

Step 5a WE 07.11.22

Tag with positive recall and transfer to Dart Engineering Calgary, Attention Roberto Fuentes

CL 07/11/23

Step 5b WE 07.11.22

QC5 (Upon receipt of STC)

Step 5c WE 07.11.22

Remove positive recall and release part to Eagle Copters

Dart Aerospace Ltd w/o# 35847

W/O:		WORK ORDER CHANGES					
DATE	STEP	PROCEDURE CHANGE	By	Date	Qty	Approval Chief Eng / Prod Mgr	Approval QC Inspector

Part No: _____ PAR #: _____ Fault Category: _____ NCR: Yes (No) DQA: LD Date: 07/11/22

QA: N/C Closed: _____ Date: _____

NCR:		WORK ORDER NON-CONFORMANCE (NCR)						
DATE	STEP	Description of NC Section A	Corrective Action Section B			Verification Section C	Approval Chief Eng	Approval QC Inspector
			Initial Chief Eng	Action Description Chief Eng	Sign & Date			
07/11/22	1.0	wrong math. was used. 0.018" instead of 0.025" thickness.	LE 07.11.22	Mat. is acceptable this one time only. see Attached email	07-11-22	07/11/22	LE 07.11.22	07/11/22

NOTE: Date & initial all entries

Jason Murdoch

From: Susanne Sheldon [ssheldon@dartaero.com]
Sent: Thursday, November 15, 2007 2:37 PM
To: 'L Lacelle'; 'David Shepherd'; 'Jason Murdoch'; 'Eric Charbonneau'
Cc: 'Leanne Elsliger'; 'Mike Petsche'; 'Dale Trepanier'
Subject: RE: tunnel mat'l

Dale is opening a corrective action to add a gauge thickness chart to QSI003 - Metal fabrication. We will also review the receiving/inspection procedure for marking the sheet metal, the thickness tolerances on sheet metal and the tolerances on the measuring instruments used. All input is welcome.
Susanne

From: L Lacelle [mailto:llacelle@dartaero.com]
Sent: November 15, 2007 2:12 PM
To: 'David Shepherd'; 'Jason Murdoch'; 'Eric Charbonneau'; 'David Shepherd'
Cc: 'Leanne Elsliger'; 'Mike Petsche'; 'Suzane Sheldon'; 'Dale Trepanier'
Subject: RE: tunnel mat'l

COMPLETELY agree!!

From: David Shepherd [mailto:dshepherd@dartaero.com]
Sent: November 15, 2007 1:41 PM
To: 'Jason Murdoch'; 'Eric Charbonneau'; 'David Shepherd'
Cc: 'Leanne Elsliger'; 'Mike Petsche'; 'L Lacelle'; 'Suzane Sheldon'; 'Dale Trepanier'
Subject: RE: tunnel mat'l

Hello all,

Just to confirm ... 0.018" is good for me ... whatever works for production ... minimum requirement is 0.015".

I think Jason's suggestion to add a gauge thickness chart to a QSI is a good idea.
The confusing thing is that it varies between stainless and carbon steel.
Maybe not QSI 017 or 018 ... perhaps the Sheet Metal Fabrication QSI.

David

From: Jason Murdoch [mailto:jmurdoch@dartaero.com]
Sent: Wednesday, November 14, 2007 3:11 PM
To: 'Eric Charbonneau'; 'David Shepherd'
Cc: 'Leanne Elsliger'; 'Mike Petsche'; 'L Lacelle'; Suzane Sheldon; 'Dale Trepanier'
Subject: RE: tunnel mat'l

Also what becomes an issue, is that the material is being identified in gauge instead of in inches. This causes workers to pull 25ga material instead of 0.025", for example. Keep in mind, workers are SUPPOSED to verify the thickness of the material before use. The use of gauge is not mentioned in QSI 017 or QSI 018 (QSI 018 does mention " dimensions are in inches " see section 4.1). If the use of gauge will continue, I find it necessary that we should have this included in the QSI, with a chart of gauge converted into inches, along with a tolerance, for each material that we use, since each is different, and approved by engineering.

jmurdoch@dartaero.com

Q.C. COORDINATOR

From: Eric Charbonneau [mailto:echarbonneau@dartaero.com]
Sent: Wednesday, November 14, 2007 3:16 PM
To: David Shepherd
Cc: Jason Murdoch; Leanne Elsliger; Mike Petsche
Subject: tunnel mat'l

Hi David, just to clarify, for some reason some 0.018" thick 304SS got identified at receiving as 0.025", waterjet operator recorded 0.022" on is FAI (depending on how you measure this is possible), the parts were audited by QC and approved by engineering on a prototype w/o, went thru the whole system unnoticed until today. I thick there is more than one department at fault in this. If you want to keep 0.025" on the drawings for the tunnel its fine we have 2 sheets in stock, I was just thinking since we already use a lot of 0.018" thick SS we could go with this and prevent this kind of mistake from happening again by standardising our material inventory.

Thanks,

Eric Charbonneau
Production Engineering Coordinator
DART *aerospace Ltd.*
T(613) 632-5200
F(613) 632-4443
echarbonneau@dartaero.com

No virus found in this incoming message.
Checked by AVG Free Edition.
Version: 7.5.503 / Virus Database: 269.15.31/1130 - Release Date: 11/14/2007 9:27 AM

No virus found in this outgoing message.
Checked by AVG Free Edition.
Version: 7.5.503 / Virus Database: 269.15.33/1132 - Release Date: 11/15/2007 9:34 AM

No virus found in this incoming message.
Checked by AVG Free Edition.
Version: 7.5.503 / Virus Database: 269.15.33/1132 - Release Date: 15/11/2007 9:34 AM

No virus found in this outgoing message.
Checked by AVG Free Edition.
Version: 7.5.503 / Virus Database: 269.15.33/1132 - Release Date: 15/11/2007 9:34 AM

Date: Monday, 11/19/2007 9:19:36 AM
User: Eric Charbonneau

Process Sheet

Customer	: CU-DAR001 Dart Helicopters Services	**Drawing Name**	: GASKET
Job Number	: 35844		
Estimate Number	: 13071		
P.O. Number	:	**Part Number**	: D36511
This Issue	: 11/19/2007 **S.O. No.** :	**Drawing Number**	: D3651 UNDER REVIEW
Prsht Rev.	: NC	**Project Number**	: N/A
First Issue	: / / **Type** : SMALL /MED FAB	**Drawing Revision**	: U/R
Previous Run	:	**Material**	:
Written By	:	**Due Date**	: 11/26/2007 **Qty:** 1 **Um:** Each
Checked & Approved By	:		
Comment	: Est Rev:A New Issue 07-09-27 DD verified by: EC		

POSITIVE RECALL

Additional Product

Job Number:

Seq. #:	Machine Or Operation:	Description :
1.0	G89	coated cloth

Comment: Qty.: 0.4885 sf(s)/Unit Total : 0.4885 sf(s)
G-89 coated cloth
Batch: M105978 LB 07-11-19

2.0	WATER JET	FLOW WATER JET

Comment: FLOW WATER JET
1-Cut as per Dwg D3651

Dwg Rev: PRE 2
Prog Rev: PRE 2

LB 07-11-19

2-Deburr if necessary

3.0	QC2	INSPECT PARTS AS THEY COME OFF MACHINE

LB 07-11-19

Comment: INSPECT PARTS AS THEY COME OFF MACHINE

4.0	QC8	SECOND CHECK

Comment: SECOND CHECK LB 07.11.20

5.0	PACKAGING 1	PACKAGING RESOURCE #1

Comment: PACKAGING RESOURCE #1
Identify and stock
Location:_____ 07/11/23 LB 07.11.20

Form: rprocess

Date: Monday, 11/19/2007 9:19:36 AM
User: Eric Charbonneau

Process Sheet

Customer: CU-DAR001 Dart Helicopters Services **Drawing Name:** GASKET

Job Number: 35844 **Part Number:** D36511

Job Number:

Seq. #:	Machine Or Operation:	Description :
6.0	QC21	FINAL INSPECTION/W/O RELEASE

Comment: FINAL INSPECTION/W/O RELEASE

07/11/27

Job Completion

LE 07.11.27

POSITIVE RECALL
EFFECTIVE 07.11.19 AUTH LE
RELEASED _____ DATE _____

SEE ATTACHED
STEPS 5a
5b
5c

LE 07.11.22

Form: rprocess

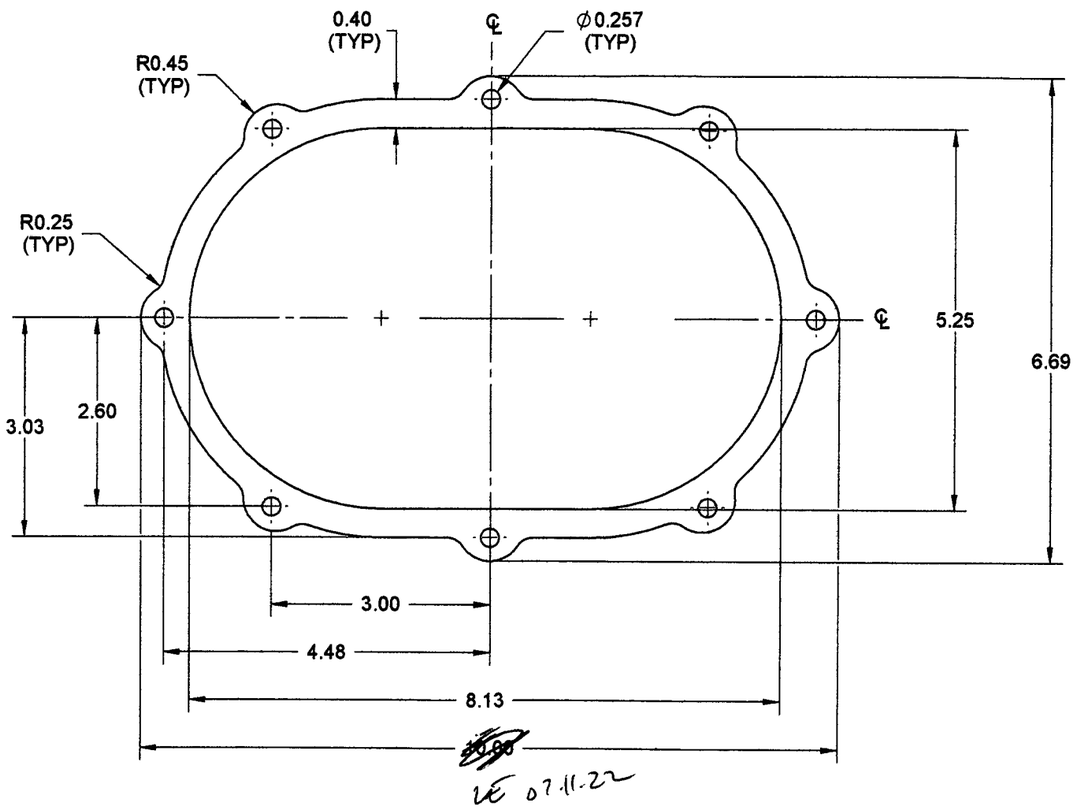

D3651-1 GASKET

PRELIMINARY ISSUE

NOTES:
1) MATERIAL: THERMO-CHEM P/N G-89, (REF. 0.060 THICK)
POSSIBLE SUPPLIER: A.R. THOMSON GROUP
2) FINISH: NONE
3) TOLERANCES: PER DART QSI 018 UNLESS OTHERWISE NOTED
4) UNITS: INCHES UNLESS OTHERWISE NOTED
5) BREAK SHARP EDGES: 0.005 TO 0.010 MAX
6) IDENTIFICATION: IDENTIFY WITH DART P/N D3651-1 USING FINE POINT PERMANENT INK MARKER
7) PART IS SYMMETRIC ABOUT ℄
8) WEIGHT: 0.09 lbs

DESIGN	RF	**DART AEROSPACE LTD** HAWKESBURY, ONTARIO, CANADA
DRAWN	RF	
CHECKED		DRAWING NO. D3651 — REV. A — SHEET 3 OF 9
MFG. APPR.		
APPROVED		TITLE: AFT BASE ASSEMBLY — SCALE 1:2
DE APPR.		
DATE	07.11.07	

COPYRIGHT © 2007 BY DART AEROSPACE LTD
THIS DOCUMENT IS PRIVATE AND CONFIDENTIAL AND IS SUPPLIED ON THE EXPRESS CONDITION THAT IT IS NOT TO BE USED FOR ANY PURPOSE OR COPIED OR COMMUNICATED TO ANY OTHER PERSON WITHOUT WRITTEN PERMISSION FROM DART AEROSPACE LTD.

DART AEROSPACE LTD	Work Order:	35844
Description: GASKET	Part Number:	3651-1
Inspection Dwg: 3651-1 Rev:		Page 1 of 1

FIRST ARTICLE INSPECTION CHECKLIST

[X] First Article [ ] Prototype

Drawing Dimension	Tolerance	Actual Dimension	Accept	Reject	Method of Inspection	Comments
Ø .257	+.006 -.001	.257	X			
6.69	+/- .030	6.69	X			
5.25	+/- .030	5.25	X			
10.00	+/- .030					
8.13	+/- .030	8.13	X			
3.00	+/- .030	3.00	X			
2.66	+/- .030	2.57	X			
3.03	+/- .030	3.03	X			
.40	+/- .030	.40	X			

Measured by:	LB	Audited by:		Prototype Approval:	
Date:	07-11-19	Date:	07.11.20	Date:	

Rev	Date	Change	Revised by	Approved
A		New Issue	KJ/JLM	

Date: Tuesday, 11/20/2007 8:43:50 AM
User: Eric Charbonneau

Process Sheet

Customer	: CU-DAR001 Dart Helicopters Services	**Drawing Name**	: DOUBLER
Job Number	: 35899		
Estimate Number	: 13055		
P.O. Number	:	**Part Number**	: D36541
This Issue	: 11/20/2007 **S.O. No.** :	**Drawing Number**	: D3654 UNDER REVIEW
Prsht Rev.	: NC	**Project Number**	: N/A
First Issue	: / / **Type** : SMALL /MED FAB	**Drawing Revision**	: U/R
Previous Run	: 35412	**Material**	:
Written By	: E	**Due Date**	: 11/27/2007 **Qty:** 1 **Um:** Each
Checked & Approved By	:		
Comment	: Est Rev:A New Issue 07-10-29 DD verified by: EC		

POSITIVE RECALL

Additional Product

Job Number:

Seq. #:	Machine Or Operation:	Description :
1.0	M304S16GA	

Comment: Qty.: 0.36750 sf(s)/Unit Total : 0.36750 sf(s)
304/316 SS sheet 16 ga (0.063" thick)
Batch: M165061 E 07.11.23

2.0	WATER JET	FLOW WATER JET

Comment: FLOW WATER JET
1-Cut as per Dwg D3654
Dwg Rev: U/R
Prog Rev: U/R E 07.11.23
2-Deburr if necessary

3.0	QC2	INSPECT PARTS AS THEY COME OFF MACHINE

Comment: INSPECT PARTS AS THEY COME OFF MACHINE E 07.11.23

4.0	QC8	SECOND CHECK

E 07.11.23

Comment: SECOND CHECK

5.0	PACKAGING 1	PACKAGING RESOURCE #1

Comment: PACKAGING RESOURCE #1
Identify and stock
Location:_____ C20711123①

Form: rprocess

Date: Tuesday, 11/20/2007 8:43:50 AM
User: Eric Charbonneau

Process Sheet

Customer: CU-DAR001 Dart Helicopters Services **Drawing Name:** DOUBLER

Job Number: 35899 **Part Number:** D36541

Job Number:

Seq. #:	Machine Or Operation:	Description :
6.0	QC21	FINAL INSPECTION/W/O RELEASE

Comment: FINAL INSPECTION/W/O RELEASE

Job Completion

ADD 5a
5b
5c
(SEE ATTACHED
LE
021.23

POSITIVE RECALL
EFFECTIVE 07.11.23 AUTH
RELEASED _____ DATE _____

Form: rprocess

W/O 35844

WE 07.11.22 Step 5a

Tag with positive recall and transfer to Dart Engineering Calgary, Attention Roberto Fuentes

CYL 07/11/23

WE 07.11.22 Step 5b

QC5 (Upon receipt of STC)

WE 07.11.22 Step 5c

Remove positive recall and release part to Eagle Copters

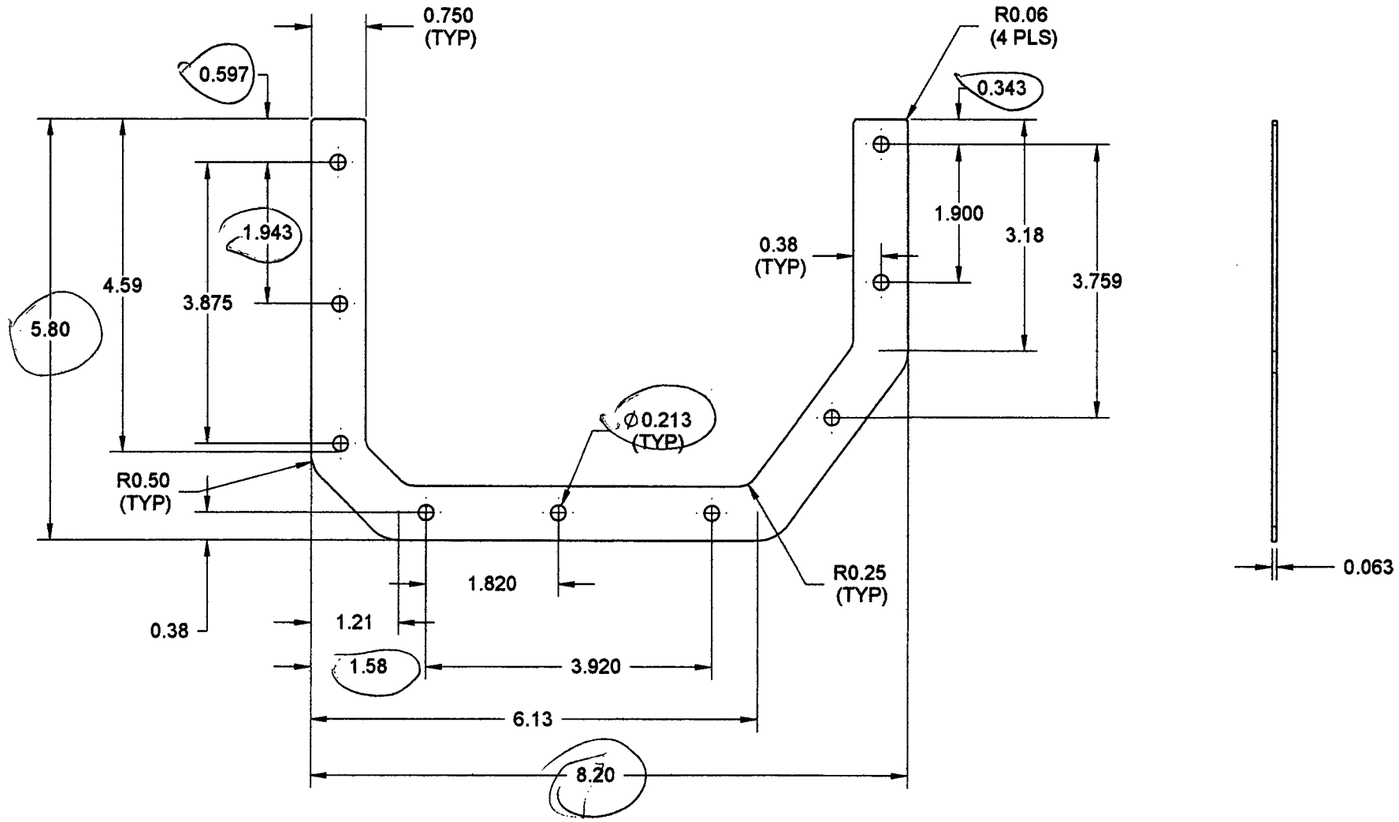

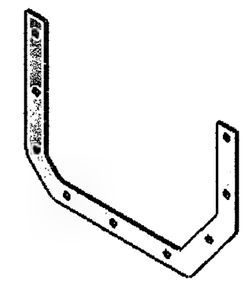

D3654-1 DOUBLER

PRELIMINARY ISSUE

NOTES:
1) MATERIAL: AISI 304/316 STAINLESS STEEL 0.063 (16 GAUGE) SHEET PER MIL-S-5019
(REF. DART SPEC. M304S16GA)
2) FINISH: NONE
3) TOLERANCES: PER DART QSI 018 UNLESS OTHERWISE NOTED
4) UNITS: INCHES UNLESS OTHERWISE NOTED
5) BREAK SHARP EDGES: 0.005 TO 0.010 MAX
6) IDENTIFICATION: IDENTIFY WITH DART P/N D3654-1 USING FINE POINT PERMANENT INK MARKER
7) WEIGHT: 0.03 lbs

REV.	DESCRIPTION	BY	DATE
A	NEW ISSUE	RF	07.11.07

DESIGN	RF	DART AEROSPACE LTD HAWKESBURY, ONTARIO, CANADA	
DRAWN	RF		
CHECKED		DRAWING NO. D3654	REV. A
MFG. APPR.			SHEET 1 OF 1
APPROVED		TITLE DOUBLER	SCALE 1:2
DE APPR.			
DATE	07.11.07		

COPYRIGHT © 2007 BY DART AEROSPACE LTD
THIS DOCUMENT IS PRIVATE AND CONFIDENTIAL AND IS SUPPLIED ON THE EXPRESS CONDITION THAT IT IS NOT TO BE USED FOR ANY PURPOSE OR COPIED OR COMMUNICATED TO ANY OTHER PERSON WITHOUT WRITTEN PERMISSION FROM DART AEROSPACE LTD

W/O 35899

Step 5a

LE
07.11.23 Tag with positive recall and transfer to Dart Engineering Calgary, Attention Roberto Fuentes

CL 07/11/23

LE Step 5b

07.11.23 QC5 (Upon receipt of STC)

LE Step 5c

07.11.23 Remove positive recall and release part to Eagle Copters

DART AEROSPACE LTD	Work Order:	35899
Description: ~~Crosstube Assembly~~ Doubler	Part Number:	D3651-1
Inspection Dwg: ~~D3654~~ D3654 Rev: A-Prelim		Page 1 of 1

FIRST ARTICLE INSPECTION CHECKLIST

[X] First Article [ ] Prototype

	Inspection Sheet Drawing Dimension	Tolerance	Actual Dimension	Accept	Reject	Method of Inspection	Comments
SIDE A	8.20	± 0.030	8.21	✓		verner	
	5.80	±0.030	5.80	✓			
	1.943	±0.010	1.943	✓			
	0.597	±0.010	0.597	✓			
	Ø 0.213	+0.006 -0.001	0.213	✓			
	0.343	±0.010	0.343	✓			
	1.58	±0.030	1.58	✓			
SIDE B							

Measured by:	[illegible]	Audited by:	[illegible]	Prototype Approval:	N/A
Date:	07.11.23	Date:	07.11.23	Date:	N/A

Rev	Date	Change	Revised by	Approved
A		New Issue	KJ/JLM	

DART AEROSPACE LTD
1270 Aberdeen Street
Hawkesbury, ON, K6A 1K7
CANADA

Tel: 613 632 5200
Fax: 613 632 1185

Email: heli@dartaero.com
Web Site: www.dartaero.com

CERTIFICATE OF CONFORMANCE

Part no:	Description:	Drawing:	Quantity:	Batch:
D3648-041	Drive Shaft Tunnel	D3648 Rev. A	One	35973
D3654-1	Doubler	D3654 Rev. A	One	35899
D3682-1	Gasket	D3682 Rev. A	One	35974

ALL MATERIALS AND PARTS HAVE BEEN INSPECTED AND COMPLY WITH THE DRAWINGS LISTED ABOVE.

DATE: 7/Jan/2008

BY: Susanne Sheldon, eng
APPROVED QA SIGNATORY

Leanne Elsliger, P. Eng
DESIGN ENGINEER

Date: Wednesday, 11/14/2007 8:25:21 AM
User: Eric Charbonneau

Process Sheet

Customer	: CU-DAR001 Dart Helicopters Services	**Drawing Name**	: TOP PANEL ASS'Y
Job Number	: 35714		
Estimate Number	: 13034		
P.O. Number	:	**Part Number**	: D36509
This Issue	: 11/14/2007 **S.O. No.** :	**Drawing Number**	: D3650 UNDER REVIEW
Prsht Rev.	: NC	**Project Number**	: N/A
First Issue	: / / **Type** : SMALL /MED FAB	**Drawing Revision**	: U/R
Previous Run	: 35015	**Material**	:
Written By	: E	**Due Date**	: 11/21/2007 **Qty:** 1 **Um:** Each
Checked & Approved By	:		
Comment	: Est Rev:A New Issue 07-09-27 DD verified by: EC		

POSITIVE RECALL

Additional Product

Job Number:

Seq. #:	Machine Or Operation:	Description :
1.0	M304S24GA	304/316 .025 Sheet

Comment: Qty.: 0.0536 sf(s)/Unit Total : 0.0536 sf(s)
304/316 SS sheet 24 ga (0.025" thick)
Batch: 105592 HB 07-11-19

2.0	WATER JET	FLOW WATER JET

Comment: FLOW WATER JET
1-Cut as per Dwg D3650

Dwg Rev: PREL HB 07-11-19
Prog Rev: PREL

2-Deburr if necessary HB 07-11-19

(2)

3.0	QC2	INSPECT PARTS AS THEY COME OFF MACHINE

HB 07-11-19

Comment: INSPECT PARTS AS THEY COME OFF MACHINE

4.0	QC8	SECOND CHECK

Comment: SECOND CHECK E 07/11/20 (12)

5.0	BRAKE NC	NC BRAKE

Comment: NC BRAKE
Form as per Dwg D3650 HB 07.11.20 (1)

Form: rprocess

Date: Wednesday, 11/14/2007 8:25:22 AM
User: Eric Charbonneau

Process Sheet

Customer: CU-DAR001 Dart Helicopters Services **Drawing Name:** TOP PANEL ASS'Y

Job Number: 35714 **Part Number:** D36509

Job Number:

Seq. #:	Machine Or Operation:	Description :
6.0	QC5	INSPECT WORK TO CURRENT STEP
		UE 07.11.23
	Comment: INSPECT WORK TO CURRENT STEP	
7.0	PACKAGING 1	PACKAGING RESOURCE #1
	Comment: PACKAGING RESOURCE #1 Identify and stock Location:_____	CL 07/11/23 ①
8.0	QC21	FINAL INSPECTION/W/O RELEASE
	Comment: FINAL INSPECTION/W/O RELEASE	D 07/11/27

Job Completion

11 Dec.27

POSITIVE RECALL
EFFECTIVE 07.11.19 AUTH M
RELEASED _____ DATE _____

ADD 7a
7b
7c
SEE ATTACHED
UE 07.11.23

Form: rprocess

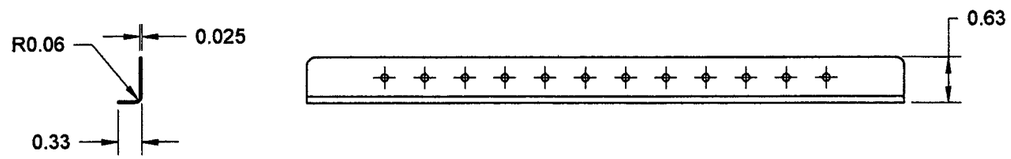

D3650-9 ANGLE
(MAKE FROM D3650-9F FLAT PATTERN)
(SCALE 1:2)

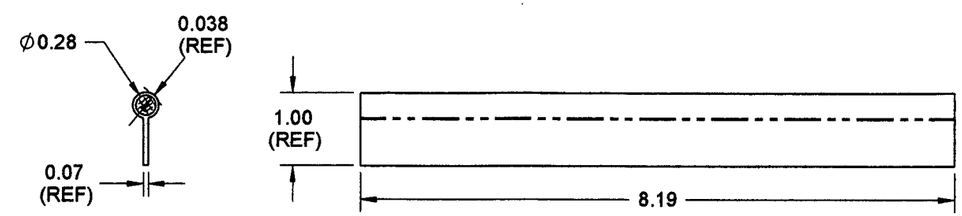

D3650-7 SEAL
(SCALE 1:2)

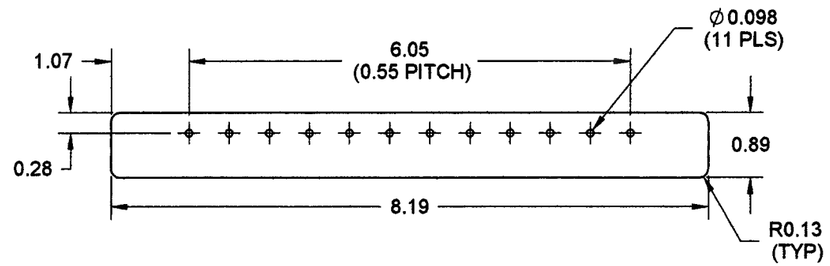

D3650-9F FLAT PATTERN
(SCALE 1:2)

D3650-7 NOTES:
1) MATERIAL: P/N 41521X120HK-FT TADPOLE SEAL (REF. BELL P/N 120-104-1)
POSSIBLE SUPPLIER: KIRKHILL-TA
2) FINISH: NONE
3) TOLERANCES: PER DART QSI 018 UNLESS OTHERWISE NOTED
4) UNITS: INCHES UNLESS OTHERWISE NOTED
5) BREAK SHARP EDGES: 0.005 TO 0.010 MAX
6) IDENTIFICATION: IDENTIFY WITH DART P/N D3650-7 USING FINE POINT PERMANENT INK MARKER

PRELIMINARY ISSUE

D3650-9 NOTES:
1) MATERIAL: AISI 304/316 STAINLESS STEEL 0.025 THICK (24 GAUGE) SHEET,
PER MIL-S-5019 (REF. DART SPEC. M304S24GA)
2) FINISH: NONE
3) TOLERANCES: PER DART QSI 018 UNLESS OTHERWISE NOTED
4) UNITS: INCHES UNLESS OTHERWISE NOTED
5) BREAK SHARP EDGES: 0.005 TO 0.010 MAX
6) IDENTIFICATION: IDENTIFY WITH DART P/N D3650-9 USING FINE POINT PERMANENT INK MARKER
7) WEIGHT: 0.05 lbs

DESIGN	RF	**DART AEROSPACE LTD** HAWKESBURY, ONTARIO, CANADA
DRAWN	RF	
CHECKED		DRAWING NO. D3650 — REV. A — SHEET 8 OF 8
MFG. APPR.		
APPROVED		TITLE: TOP PANEL ASSEMBLY — SCALE 1:8
DE APPR.		
DATE	07.11.07	

COPYRIGHT © 2007 BY DART AEROSPACE LTD
THIS DOCUMENT IS PRIVATE AND CONFIDENTIAL AND IS SUPPLIED ON THE EXPRESS CONDITION THAT IT IS NOT TO BE USED FOR ANY PURPOSE OR COPIED OR COMMUNICATED TO ANY OTHER PERSON WITHOUT WRITTEN PERMISSION FROM DART AEROSPACE LTD.

DART AEROSPACE LTD	Work Order:	35714
Description: Top PANEL ASS'Y	Part Number:	D3650-9
Inspection Dwg: 3650 Rev: PRE L		Page 1 of 1

FIRST ARTICLE INSPECTION CHECKLIST

[X] First Article [ ] Prototype

Drawing Dimension	Tolerance	Actual Dimension	Accept	Reject	Method of Inspection	Comments
Ø .098	+.005 -.001	.100	✓			
.89	+/- .030	.89	✓			
8.14	+/- .030	8.188	✓			
6.05	+/- .030	6.05	✓			
1.07	+/- .030	1.07	✓			
.28	+/- .030	.28	✓			

Measured by:	LB	Audited by:		Prototype Approval:	
Date:	07-11-19	Date:	07/11/20	Date:	

Rev	Date	Change	Revised by	Approved
A		New Issue	KJ/JLM	

Dart Aerospace Ltd

W/O:		WORK ORDER CHANGES					
DATE	STEP	PROCEDURE CHANGE	By	Date	Qty	Approval Chief Eng / Prod Mgr	Approval QC Inspector

Part No: _____ **PAR #:** _____ **Fault Category:** _____ **NCR:** Yes No **DQA:** _____ **Date:** _____

QA: N/C Closed: _____ **Date:** _____

NCR:		WORK ORDER NON-CONFORMANCE (NCR)						
DATE	STEP	Description of NC Section A	Corrective Action Section B			Verification Section C	Approval Chief Eng	Approval QC Inspector
			Initial Chief Eng	Action Description Chief Eng	Sign & Date			
07/11/23	# 1.0	wrong mat. thickness was used. 0.018" instead of 0.025"	LE 07.11.23	MAT.. ~~is Accat~~ thickness is Accatable this one time only	LE 07.11.23	07/11/23	LE 07.11.23	07/11/23

NOTE: Date & initial all entries

W/O 35714

Step 7a

VE 07.11.23

Tag with positive recall and transfer to Dart Engineering Calgary, Attention Roberto Fuentes

CL07/11/23

Step 7b

VE 07.11.23

QC5 (Upon receipt of STC)

Step 7c

VE 07.11.23

Remove positive recall and release part to Eagle Copters

Date: Wednesday, 11/14/2007 8:32:26 AM
User: Eric Charbonneau

Process Sheet

Customer	: CU-DAR001 Dart Helicopters Services	**Drawing Name**	: TOP PANNEL ASS'Y
Job Number	: 35715		
Estimate Number	: 13067		
P.O. Number	:	**Part Number**	: D3650041
This Issue	: 11/14/2007 **S.O. No.** :	**Drawing Number**	: D3650 UNDER REVIEW
Prsht Rev.	: NC	**Project Number**	: N/A
First Issue	: / / **Type** : SMALL /MED FAB	**Drawing Revision**	: U/R
Previous Run	:	**Material**	:
Written By	: EC	**Due Date**	: 11/21/2007 **Qty:** 1 **Um:** Each
Checked & Approved By	:		
Comment	: Est Rev:A New Issue 07-11-12 EC verified by: DD		

POSITIVE RECALL

Additional Product

Job Number:

Seq. #:	Machine Or Operation:	Description :
1.0	MS20427M33	Rivet M105 728
	Comment: Qty.: 88.0000 Each(s)/Unit Total : 88.0000 Each(s) Rivet	07-11-23
2.0	PACKAGING 1	PACKAGING RESOURCE #1
	Comment: PACKAGING RESOURCE #1 pick kit	1
3.0	D36501	AFT PANEL
	Comment: Qty.: 1.0000 Each(s)/Unit Total : 1.0000 Each(s) AFT PANEL	B35707 1
4.0	D36503	CENTER PANEL
	Comment: Qty.: 1.0000 Each(s)/Unit Total : 1.0000 Each(s) CENTER PANEL	B35708 1
5.0	D36505	CENTER PANEL
	Comment: Qty.: 1.0000 Each(s)/Unit Total : 1.0000 Each(s) CENTER PANEL	B35709 1

Date: Wednesday, 11/14/2007 8:32:26 AM
User: Eric Charbonneau

Process Sheet

Customer: CU-DAR001 Dart Helicopters Services **Drawing Name:** TOP PANNEL ASS'Y

Job Number: 35715 **Part Number:** D3650041

Job Number:

Seq. #:	Machine Or Operation:	Description :
6.0	AN3C3A	Bolt
	Comment: Qty.: 12.0000 Each(s)/Unit Total : 12.0000 Each(s) Bolt M106277	
7.0	AN960C10	WASHER
	Comment: Qty.: 12.0000 EACH(s)/Unit Total : 12.0000 EACH(s) WASHER M106302	
8.0	SMALL FAB 1	SMALL & MEDIUM FAB RESOURCE 1
	Comment: SMALL & MEDIUM FAB RESOURCE 1 ~~1- Form dimple for MS20427M3 rivet per dwg D3649~~ ~~*********ensure dimples are on the proper side**********~~ 2-Assemble ~~nutplates~~ as per dwg D3649 07.11.22 ①	
9.0	QC5	INSPECT WORK TO CURRENT STEP
	Comment: INSPECT WORK TO CURRENT STEP LE 07.11.23	
10.0	PACKAGING 1	PACKAGING RESOURCE #1
	Comment: PACKAGING RESOURCE #1 Identify and stock Location:_____ CL 07/11/23 ①	
11.0	QC21	FINAL INSPECTION/W/O RELEASE
	Comment: FINAL INSPECTION/W/O RELEASE 07/11/27 11.07.11.27	

Job Completion

POSITIVE RECALL
EFFECTIVE 07.11.19 AUTH
RELEASED _____ DATE _____

Form: rprocess

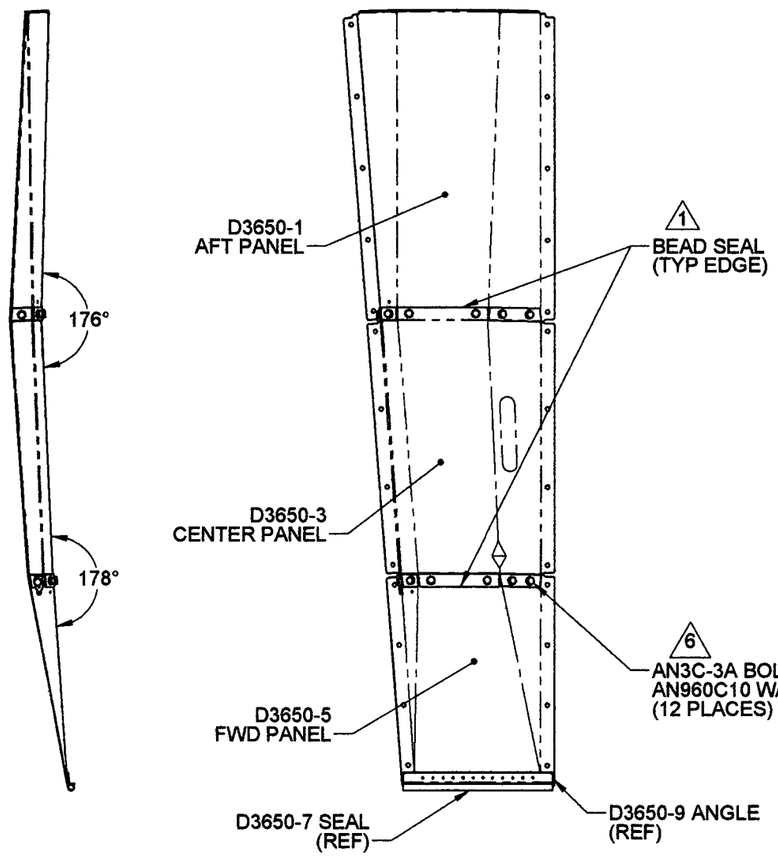

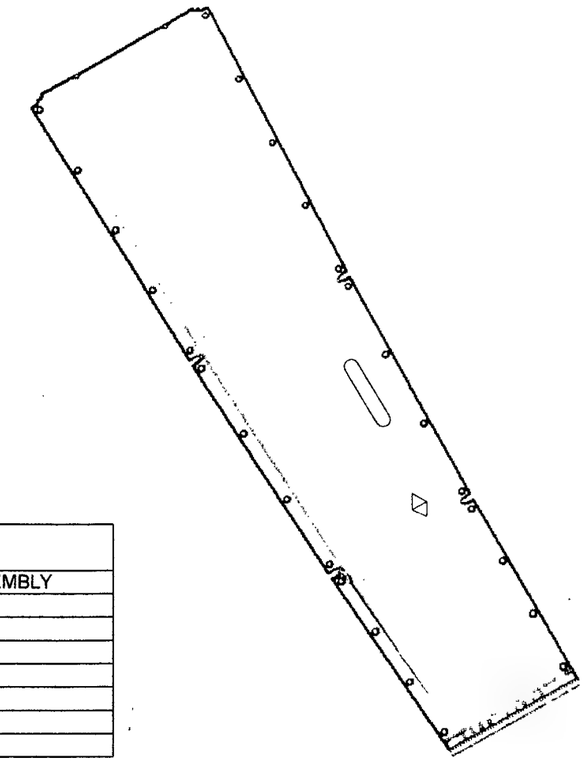

PART LIST

QTY -041	PART NUMBER	DESCRIPTION
X	D3650-041	TOP PANEL ASSEMBLY
1	D3650-1	AFT PANEL
1	D3650-3	CENTER PANEL
1	D3650-5	FWD PANEL
12	AN3C-3A	BOLT
12	AN960C10	WASHER

PRELIMINARY ISSUE

D3650-041 TOP PANEL ASSEMBLY

NOTES:
1) SEAL GAPS USING 3M HIGH PERFORMANCE CONTACT ADHESIVE 1357
2) TOLERANCES: PER DART QSI 018 UNLESS OTHERWISE NOTED
3) UNITS: INCHES UNLESS OTHERWISE NOTED
4) BREAK SHARP EDGES: 0.005 TO 0.010 MAX
5) IDENTIFICATION: IDENTIFY WITH DART P/N D3650-041 USING FINE POINT PERMANENT INK MARKER
6) TORQUE FASTENERS UP TO 25 in-lb
7) WEIGHT: 3.3 lbs

REV.	DESCRIPTION	BY	DATE
6	NEW ISSUE	RF	07.11.07

DESIGN	RF	DART AEROSPACE LTD HAWKESBURY, ONTARIO, CANADA	
DRAWN	RF		
CHECKED		DRAWING NO. D3650	REV. 1
MFG. APPR.			SHEET 1 OF 8
APPROVED		TITLE TOP PANEL ASSEMBLY	SCALE 1:8
DE APPR.			
DATE	07.11.07		

COPYRIGHT © 2007 BY DART AEROSPACE LTD
THIS DOCUMENT IS PRIVATE AND CONFIDENTIAL AND IS SUPPLIED ON THE EXPRESS CONDITION THAT IT IS NOT TO BE USED FOR ANY PURPOSE OR COPIED OR COMMUNICATED TO ANY OTHER PERSON WITHOUT WRITTEN PERMISSION FROM DART AEROSPACE LTD

Dart Aerospace Ltd.

Date: Friday, 11/23/2007 11:53:44 AM
User: Eric Charbonneau

Process Sheet

Customer	: CU-DAR001 Dart Helicopters Services	**Drawing Name**	: GASKET
Job Number	: 35974		
Estimate Number	: 13035		
P.O. Number	:	**Part Number**	: D36821
This Issue	: 11/23/2007 **S.O. No.** :	**Drawing Number**	: D3682 UNDER REVIEW
Prsht Rev.	: NC	**Project Number**	: N/A
First Issue	: / / **Type** : SMALL /MED FAB	**Drawing Revision**	: U/R
Previous Run	: 35019	**Material**	:
Written By	: E	**Due Date**	: 11/30/2007 **Qty:** 1 **Um:** Each
Checked & Approved By	:		
Comment	: Est Rev:A New Issue 07-09-27 DD verified by: EC		

POSITIVE RECALL

Additional Product

Job Number:

Seq. #:	Machine Or Operation:	Description :
1.0	G89	coated cloth

Comment: Qty.: 0.3258 sf(s)/Unit Total : 0.3258 sf(s)
G-89 coated cloth
Batch: M105928 E 07.11.23

2.0	WATER JET	FLOW WATER JET

Comment: FLOW WATER JET
1-Cut as per Dwg D3682

Dwg Rev: U/R
Prog Rev: U/R E 07.11.23

2-Deburr if necessary

3.0	QC2	INSPECT PARTS AS THEY COME OFF MACHINE

Comment: INSPECT PARTS AS THEY COME OFF MACHINE E 07.11.23

4.0	QC8	SECOND CHECK

VE 07.11.23

Comment: SECOND CHECK

5.0	PACKAGING 1	PACKAGING RESOURCE #1

Comment: PACKAGING RESOURCE #1
Identify and stock
Location:_____ 2071123 (1)

Form: rprocess

Date: Friday, 11/23/2007 11:53:44 AM
User: Eric Charbonneau

Process Sheet

Customer: CU-DAR001 Dart Helicopters Services **Drawing Name:** GASKET

Job Number: 35974 **Part Number:** D36821

Job Number:

Seq. #:	Machine Or Operation:	Description :
6.0	QC21	FINAL INSPECTION/W/O RELEASE

Comment: FINAL INSPECTION/W/O RELEASE

D 07/11/27
U 07.11.27

Job Completion

ADD 5a
5b
5c

SEE ATTACHED
UE 07.11.23

POSITIVE RECALL
EFFECTIVE 07.11.23 AUTH U
RELEASED _____ DATE _____

Form: rprocess

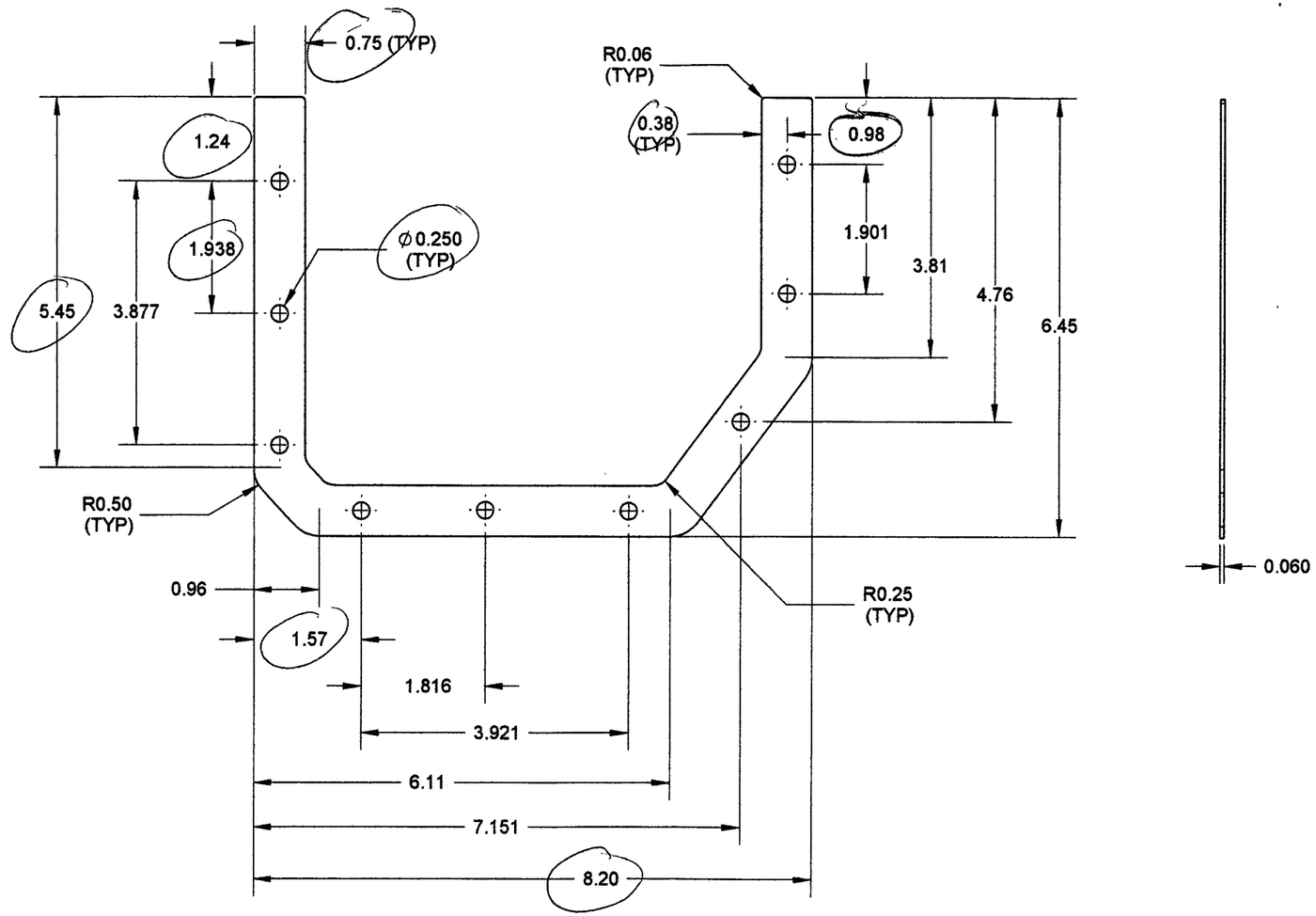

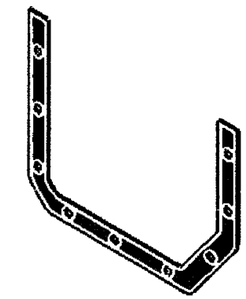

PRELIMINARY ISSUE

D3682-1 GASKET

NOTES:
1) MATERIAL: THERMO-CHEM P/N G-89, (REF. 0.060 THICK)
POSSIBLE SUPPLIER: A.R. THOMSON GROUP
2) FINISH: NONE
3) TOLERANCES: PER DART QSI 018 UNLESS OTHERWISE NOTED
4) UNITS: INCHES UNLESS OTHERWISE NOTED
5) BREAK SHARP EDGES: 0.005 TO 0.010 MAX
6) IDENTIFICATION: IDENTIFY WITH DART P/N D3682-1 USING FINE POINT PERMANENT INK MARKER
7) WEIGHT: 0.05 lbs

REV.	DESCRIPTION	BY	DATE
A	NEW ISSUE	RF	07.11.07

DESIGN	RF	DART AEROSPACE LTD HAWKESBURY, ONTARIO, CANADA	
DRAWN	RF		
CHECKED		DRAWING NO. D3682	REV. A SHEET 1 OF 1
MFG. APPR.			
APPROVED		TITLE GASKET	SCALE 1:2
DE APPR.			
DATE	07.11.07		

COPYRIGHT © 2007 BY DART AEROSPACE LTD
THIS DOCUMENT IS PRIVATE AND CONFIDENTIAL AND IS SUPPLIED ON THE EXPRESS CONDITION THAT IT IS NOT TO BE USED FOR ANY PURPOSE OR COPIED OR COMMUNICATED TO ANY OTHER PERSON WITHOUT WRITTEN PERMISSION FROM DART AEROSPACE LTD

W/O 35974

Step 5a

VE 07.11.23 Tag with positive recall and transfer to Dart Engineering Calgary, Attention Roberto Fuentes

CL 07/11/23

VE 07.11.23 Step 5b

QC5 (Upon receipt of STC)

VE 07.11.23 Step 5c

Remove positive recall and release part to Eagle Copters

DART AEROSPACE LTD	Work Order:	359174
Description: Crosstube Assembly	Part Number:	D3682-1
Inspection Dwg: **Rev:**		Page 1 of 1

FIRST ARTICLE INSPECTION CHECKLIST

[X] First Article [ ] Prototype

	Inspection Sheet Drawing Dimension	Tolerance	Actual Dimension	Accept	Reject	Method of Inspection	Comments
SIDE A	0.75	± 0.03	0.752	✓			
	1.24	"	1.245	✓			
	1.938	"	1.940	✓			
	ϕ.250	+0.000 −0.001	ϕ.252	✓			
	~~5.45~~	~~± 0.03~~	N/A				
	1.57	"	1.580	✓			
	8.20	"	8.187	✓			
	0.98	"	0.985	✓			
	0.38	"	0.387	✓			
SIDE B							

Measured by:	EE	Audited by:	VB	Prototype Approval:	N/A
Date:	07.11.23	Date:	07.11.23	Date:	N/A

Rev	Date	Change	Revised by	Approved
A		New Issue	KJ/JLM	

DART AEROSPACE LTD
1270 Aberdeen Street
Hawkesbury, ON, K6A 1K7
CANADA

Tel: 613 632 5200
Fax: 613 632 1185

Email: heli@dartaero.com
Web Site: www.dartaero.com

CERTIFICATE OF CONFORMANCE

Part no:	Description:	Drawing:	Quantity:	Batch:
D3648-041	Drive Shaft Tunnel	D3648 Rev. A	One	35973
D3654-1	Doubler	D3654 Rev. A	One	35899
D3682-1	Gasket	D3682 Rev. A	One	35974

ALL MATERIALS AND PARTS HAVE BEEN INSPECTED AND COMPLY WITH THE DRAWINGS LISTED ABOVE.

DATE: 7/Jan/2008

BY: Susanne Sheldon, eng
APPROVED QA SIGNATORY

Leanne Elsliger, P. Eng
DESIGN ENGINEER

Ref: D3648041 per Lea Date: 11/23/2007
Dep: Wgt: 7.0 LBS
DV. 0.00

SHIPPING:	182.00
SPECIAL:	44.87
HANDLING:	0.00
TOTAL:	226.87

Svcs: PRIORITY OVERNIGHT
TRCK: 9018 2252 4627

ORIGIN ID: YMXA (613) 632-3336
BRIGITTE GOLDEN
DART AEROSPACE LTD
1270 ABERDEEN ST

HAWKESBURY, ON K6A1K7
CANADA CA

Ship Date: 23NOV07
ActWgt: 7.0 LB MAN
SystemH: 0174031/CAFE2352
Account: S *********
Dimend: 61x18x15 IN

TO DAVID SHEPHERD/ROBERTO
DART AEROSPACE LTD
823 MCTAVISH RD. N.E.
MIO HANGAR
CALGARY, AB T2E7G9 (CA)

(403) 250-7370

FedEx Express

CLS:RC:07/23

Ref: D3648041 per Leanne

Delivery Address Barcode

BILL SENDER

PRIORITY OVERNIGHT

MON
Deliver By:
26NOV07

TRK# 9018 2252 4627 Form 0461

YYC A1

T2E7G9 -AB-CA 5B YYCA

Part # 163-A3-P31 NEW 02/07

Dart Aerospace Ltd.

Date: Friday, 10/5/2007 7:59:54 AM
User: Eric Charbonneau

Process Sheet

Customer	: CU-DAR001 Dart Helicopters Services	**Drawing Name**	: AFT BASE **PROTOTYPE**
Job Number	: 35019		
Estimate Number	: 13035		
P.O. Number	:	**Part Number**	: D36511
This Issue	: 10/5/2007 **S.O. No.** :	**Drawing Number**	: D3651 UNDER REVIEW
Prsht Rev.	: NC	**Project Number**	: N/A
First Issue	: / / **Type** : SMALL /MED FAB	**Drawing Revision**	: U/R **FOR ENGINEERING USE ONLY**
Previous Run	:	**Material**	:
Written By	: EC	**Due Date**	: 10/12/2007 **Qty:** 2 **Um:** Each
Checked & Approved By	:		
Comment	: Est Rev:A New Issue 07-09-27 DD verified by: EC		

Additional Product

Job Number:

Seq. #:	Machine Or Operation:	Description :
1.0	G89	coated cloth

Comment: Qty.: 0.4883 sf(s)/Unit Total : 0.9765 sf(s)
G-89 coated cloth
Batch: 105823 HB07-10-9

~~CERTIFICATE OF CONFORMITY REQUIRED~~ NOT REQUIRED (SEE BMC PROD REPORT) 07.10.10

2.0	WATER JET	FLOW WATER JET

Comment: FLOW WATER JET
1-Cut as per Dwg D3651

Dwg Rev: PRE
Prog Rev: PRE HB 07-10-9

2-Deburr if necessary

(1)

3.0	QC2	INSPECT PARTS AS THEY COME OFF MACHINE

HB 07-10-9

Comment: INSPECT PARTS AS THEY COME OFF MACHINE

4.0	QC8	SECOND CHECK

07.10.10 ENGINEERING APPROVAL 07/10/09 (1)

Comment: SECOND CHECK

5.0	PACKAGING 1	PACKAGING RESOURCE #1

FOR ENGINEERING USE ONLY

Comment: PACKAGING RESOURCE #1
Identify ~~and stock~~
Location:_____

Form: rprocess

Date: Friday, 10/5/2007 7:59:54 AM
User: Eric Charbonneau

Process Sheet

Customer: CU-DAR001 Dart Helicopters Services **Drawing Name:** AFT BASE

Job Number: 35019 **Part Number:** D36511

Job Number:

Seq. #:	Machine Or Operation:	Description :
6.0	QC21	FINAL INSPECTION/W/O RELEASE

Comment: FINAL INSPECTION/W/O RELEASE 07/11/07

Job Completion

Form: rprocess

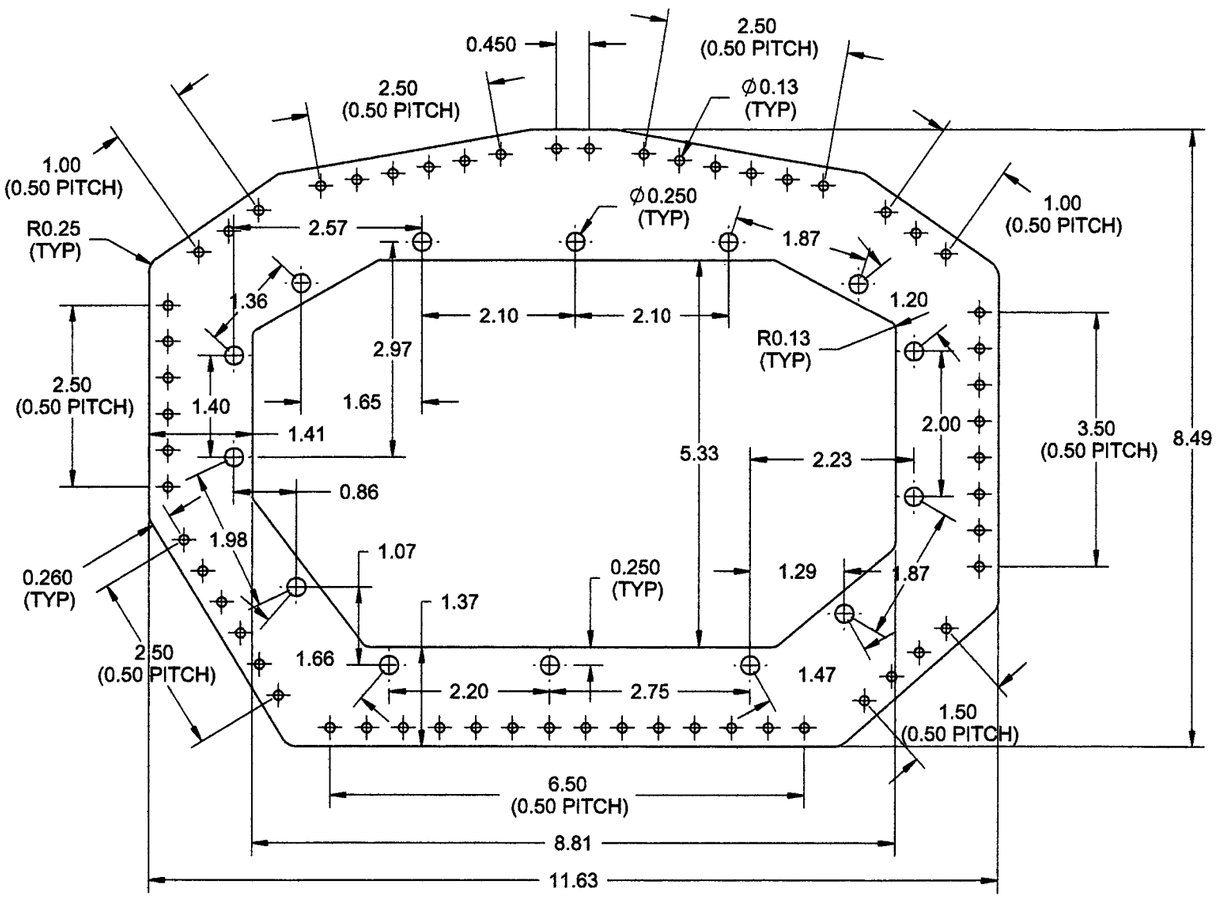

D3651-11 GASKET

DIMENSIONS BETWEEN HOLES ARE PROVIDED FOR REFERENCE ONLY
TRANSFER ∅0.129 HOLES FROM D3651-5/-7 WELDED ASSEMBLY
TRANSFER ∅0.250 HOLES FROM D3649-041/D3650-041 SECTION A-A

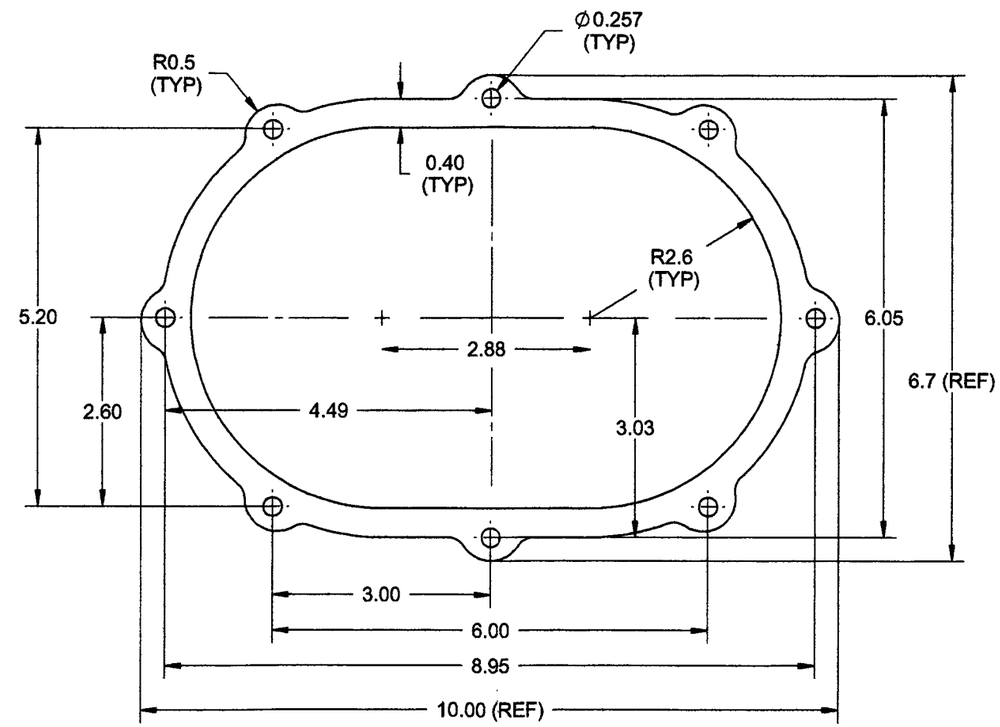

D3551-1 GASKET

NOTES:

1) MATERIAL: THERMO-CHEM P/N G-89
POSSIBLE SUPPLIER: A.R. THOMSON GROUP
2) FINISH: NONE
3) TOLERANCES ARE PER DART QSI 018 UNLESS OTHERWISE NOTED
4) ALL DIMENSIONS ARE IN INCHES
5) MACHINE PER DRAWING "D3651.A2"

DESIGN RF	DRAWN BY RF	**DART AEROSPACE LTD** HAWKESBURY, ONTARIO, CANADA
CHECKED DS	APPROVED	DRAWING NO. D3651 — REV. A — SHEET 2 OF 5
DATE 07.09.10		TITLE AFT BASE — SCALE 1:2

COPYRIGHT © 2007 BY DART AEROSPACE LTD.
THIS DOCUMENT IS PRIVATE AND CONFIDENTIAL AND IS SUPPLIED ON THE EXPRESS CONDITION THAT IT IS NOT TO BE USED FOR ANY PURPOSE OR COPIED OR COMMUNICATED TO ANY OTHER PERSON WITHOUT WRITTEN PERMISSION FROM DART AEROSPACE LTD.

DART AEROSPACE LTD	Work Order:	35019
Description: AFT BASE	Part Number:	D3651-1
Inspection Dwg: 3651 Rev: PRE		Page 1 of 1

FIRST ARTICLE INSPECTION CHECKLIST

[X] First Article [ ] Prototype

Drawing Dimension	Tolerance	Actual Dimension	Accept	Reject	Method of Inspection	Comments
Ø .257	+.000 -.001	.257	X			
10.00	+/- .030					
8.95	+/- .030	8.95	X			
6.00	+/- .030	6.00	X			
5.20	+/- .030	5.20	X			
6.05	+/- .030	6.05	X			
6.70	+/- .030	6.70	X			
.140	+/- .030	.140	X			

Measured by:	IB
Date:	07-10-9

Audited by:	G
Date:	07/10/09

Prototype Approval:	07/10/10
Date:	

Rev	Date	Change	Revised by	Approved
A		New Issue	KJ/JLM	

Marc Bellavance

From: Roberto Fuentes [rfuentes@dartaero.com]
Sent: October 10, 2007 12:01 PM
To: 'Marc Bellavance'
Subject: RE: D3651-1/-11

I forgot is no structural test only fit and functionality, but material use for prototype it is not necessary to have all the cert, because according to Eric they don't have enough material to do D3651-1, he will use rubber for this prototype, but for the part will be use for conformity will required the cert for all the material use to make it the tunnel, I try with Frank if he can let me a copy for gasket material Eagle sent to make those gaskets.

Roberto

From: Marc Bellavance [mailto:mbellavance@dartaero.com]
Sent: Wednesday, October 10, 2007 8:58 AM
To: 'Roberto Fuentes'
Subject: D3651-1/-11

Roberto,

I did a dimensional check on D3651-1/-11 Gaskets.
I have signed the FAI sheet but as for the W/O, I prefer not to sign it because there are no material specs attached to it and the W/O is indicating there should be there. I was told that the material comes from Eagle, and that no certs were supplied with the material.

Do you intend to do some structural testing on this?
If it's the case, then you will need the certs.
If not, let me know and I will cross out the "Certification of Comformity" note that was stamped on the W/O and I will sign it off.

Thanks!

Marc

Date: Friday, 10/5/2007 8:02:49 AM
User: Eric Charbonneau

Process Sheet

PROTOTYPE

FOR ENGINEERING USE ONLY

Customer	: CU-DAR001 Dart Helicopters Services	Drawing Name	: AFT BASE
Job Number	: 35022		
Estimate Number	: 13036		
P.O. Number	:	Part Number	: D365111
This Issue	: 10/5/2007 S.O. No. :	Drawing Number	: D3651 UNDER REVIEW
Prsht Rev.	: NC	Project Number	: N/A
First Issue	: / / Type : SMALL /MED FAB	Drawing Revision	: U/R
Previous Run	:	Material	:
Written By	: EC	Due Date	: 10/12/2007 Qty: 2 Um: Each
Checked & Approved By	:		
Comment	: Est Rev:A New Issue 07-09-27 DD verified by: EC		

Additional Product

Job Number:

Seq. #:	Machine Or Operation:	Description :
1.0	G89	coated cloth

Comment: Qty.: 0.7203 sf(s)/Unit Total : 1.4406 sf(s)
G-89 coated cloth
Batch: 105 823 HB 07-10-9

~~CERTIFICATE OF CONFORMITY REQUIRED~~ NOT REQUIRED (PER ATTACHED E-MAIL FROM ROBERTO) 07.10.10

2.0	WATER JET	FLOW WATER JET

Comment: FLOW WATER JET
1-Cut as per Dwg D3651

Dwg Rev: PRE
Prog Rev: PRE HB 07-10-9

1

2-Deburr if necessary

3.0	QC2	INSPECT PARTS AS THEY COME OFF MACHINE

HB 07-10-9

Comment: INSPECT PARTS AS THEY COME OFF MACHINE

4.0	QC8	SECOND CHECK

ENGINEERING APPROVAL

Comment: SECOND CHECK HB 07.10.10 / EC 07/10/09

5.0	PACKAGING 1	PACKAGING RESOURCE #1

FOR ENGINEERING USE ONLY

Comment: PACKAGING RESOURCE #1
Identify ~~and stock~~
Location:

Form: rprocess

Date: Friday, 10/5/2007 8:02:49 AM
User: Eric Charbonneau

Process Sheet

Customer: CU-DAR001 Dart Helicopters Services **Drawing Name:** AFT BASE

Job Number: 35022 **Part Number:** D365111

Job Number:

Seq. #:	Machine Or Operation:	Description :
6.0	QC21	FINAL INSPECTION/W/O RELEASE

Comment: FINAL INSPECTION/W/O RELEASE

07/11/27

Job Completion

Form: rprocess

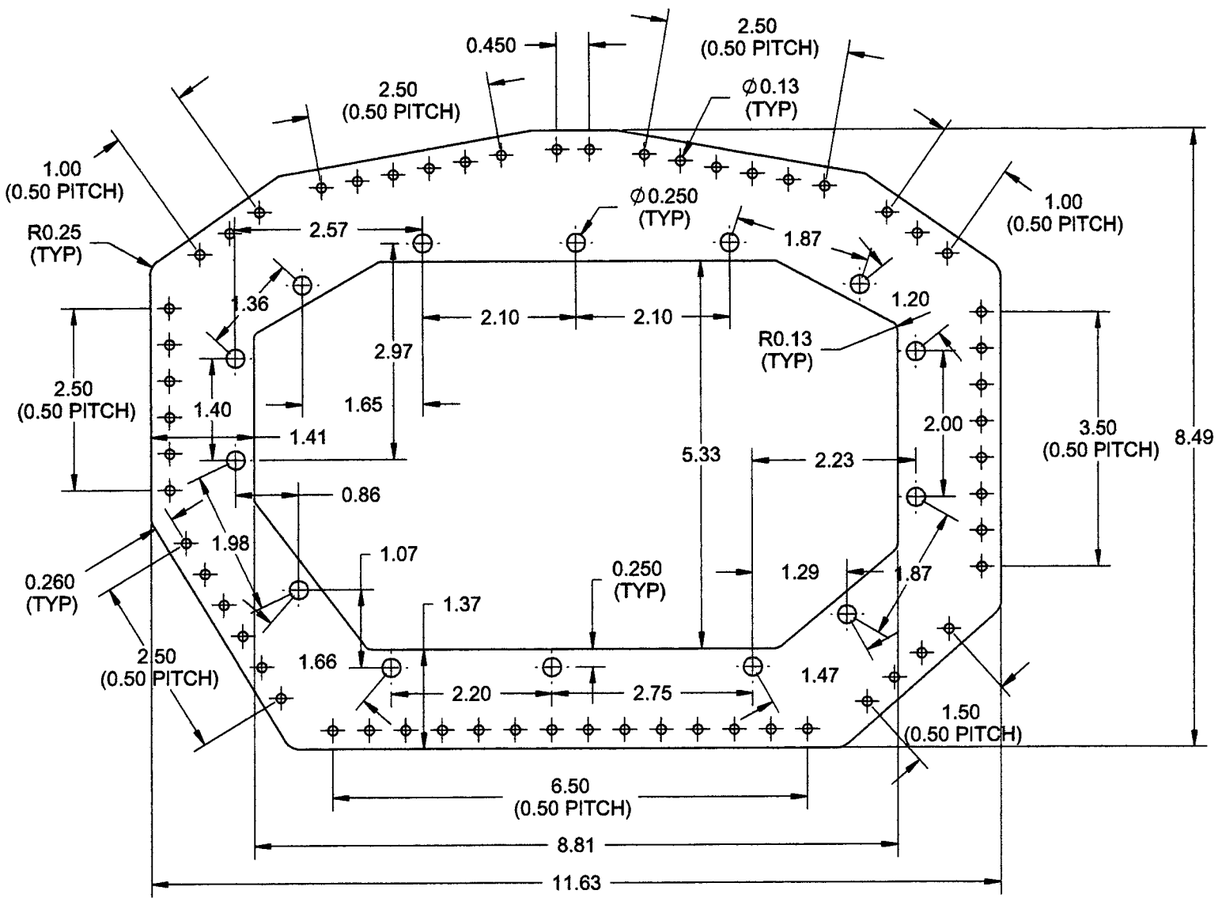

D3651-11 GASKET

DIMENSIONS BETWEEN HOLES ARE PROVIDED FOR REFERENCE ONLY
TRANSFER ∅0.129 HOLES FROM D3651-5/-7 WELDED ASSEMBLY
TRANSFER ∅0.250 HOLES FROM D3649-041/D3650-041 SECTION A-A

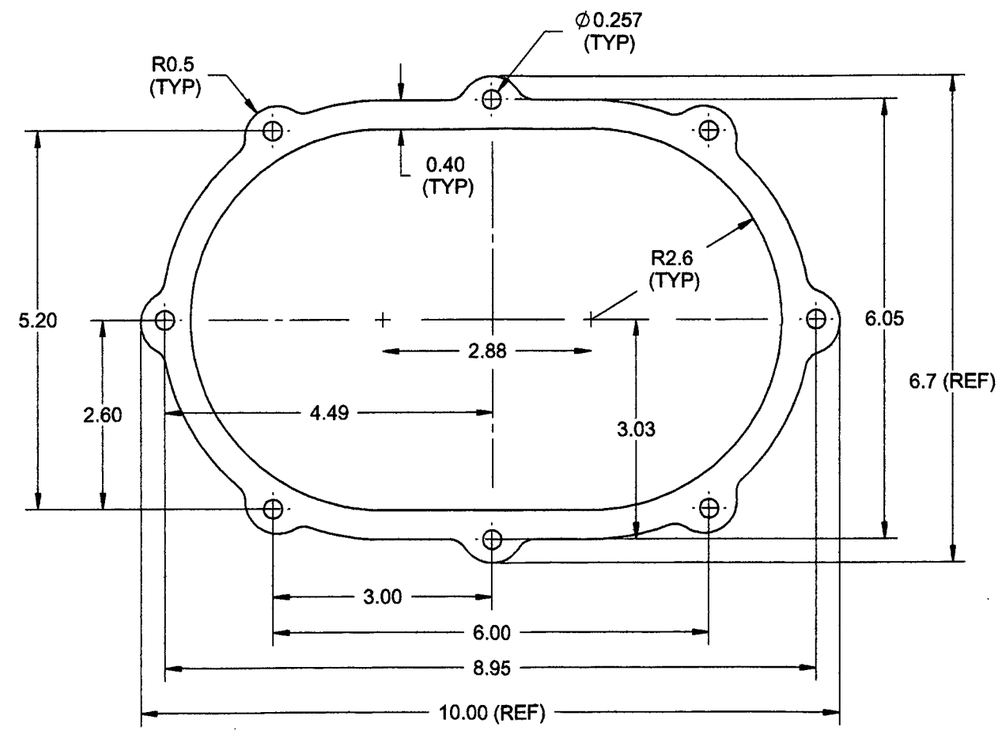

D3551-1 GASKET

NOTES:

1) MATERIAL: THERMO-CHEM P/N G-89
   POSSIBLE SUPPLIER: A.R. THOMSON GROUP
2) FINISH: NONE
3) TOLERANCES ARE PER DART QSI 018 UNLESS OTHERWISE NOTED
4) ALL DIMENSIONS ARE IN INCHES
5) MACHINE PER DRAWING "D3651.A2"

DESIGN RF	DRAWN BY RF	**DART AEROSPACE LTD** HAWKESBURY, ONTARIO, CANADA
CHECKED DS	APPROVED	DRAWING NO. D3651 — REV. A — SHEET 2 OF 5
DATE 07.09.10		TITLE AFT BASE — SCALE 1:2

COPYRIGHT © 2007 BY DART AEROSPACE LTD.
THIS DOCUMENT IS PRIVATE AND CONFIDENTIAL AND IS SUPPLIED ON THE EXPRESS CONDITION THAT IT IS NOT TO BE USED FOR ANY PURPOSE OR COPIED OR COMMUNICATED TO ANY OTHER PERSON WITHOUT WRITTEN PERMISSION FROM DART AEROSPACE LTD.

DART AEROSPACE LTD	Work Order:	35022
Description: AFT BASE	Part Number:	D3651-11
Inspection Dwg: D3651 Rev: PRE		Page 1 of 1

FIRST ARTICLE INSPECTION CHECKLIST

[X] First Article [ ] Prototype

Drawing Dimension	Tolerance	Actual Dimension	Accept	Reject	Method of Inspection	Comments
8.49	+/- .030	8.49	✓			
8.81	+/- .030	8.81	✓			
11.63	+/- .030	11.63	✓			
5.33	+/- .030	5.33	✓			

Measured by:	HB	Audited by:	[illegible]	Prototype Approval:	
Date:	07-10-9	Date:	07/10/09	Date:	07.10.10

Rev	Date	Change	Revised by	Approved
A		New Issue	KJ/JLM	

Marc Bellavance

From: Roberto Fuentes [rfuentes@dartaero.com]
Sent: October 10, 2007 12:01 PM
To: 'Marc Bellavance'
Subject: RE: D3651-1/-11

I forgot is no structural test only fit and functionality, but material use for prototype it is not necessary to have all the cert, because according to Eric they don't have enough material to do D3651-1, he will use rubber for this prototype, but for the part will be use for conformity will required the cert for all the material use to make it the tunnel, I try with Frank if he can let me a copy for gasket material Eagle sent to make those gaskets.

Roberto

From: Marc Bellavance [mailto:mbellavance@dartaero.com]
Sent: Wednesday, October 10, 2007 8:58 AM
To: 'Roberto Fuentes'
Subject: D3651-1/-11

Roberto,

I did a dimensional check on D3651-1/-11 Gaskets.
I have signed the FAI sheet but as for the W/O, I prefer not to sign it because there are no material specs attached to it and the W/O is indicating there should be there. I was told that the material comes from Eagle, and that no certs were supplied with the material.

Do you intend to do some structural testing on this?
If it's the case, then you will need the certs.
If not, let me know and I will cross out the "Certification of Comformity" note that was stamped on the W/O and I will sign it off.

Thanks!

Marc

Date: Friday, 10/5/2007 8:03:38 AM
User: Eric Charbonneau

Process Sheet

Customer : CU-DAR001 Dart Helicopters Services
Job Number : 35023
Estimate Number : 13037
P.O. Number :
This Issue : 10/5/2007 **S.O. No.** :
Prsht Rev. : NC
First Issue : / / **Type** : SMALL /MED FAB
Previous Run :
Written By : EC
Checked & Approved By :
Comment : Est Rev:A New Issue 07-09-27 DD verified by: EC

Drawing Name : AFT BASE

PROTOTYPE

Part Number : D365113
Drawing Number : D3651 UNDER REVIEW
Project Number : N/A
Drawing Revision : U/R
Material :
Due Date : 10/12/2007 **Qty:** 2 **Um:** Each

FOR ENGINEERING USE ONLY

Additional Product

Job Number:

Seq. #:	Machine Or Operation:	Description :
1.0	M304S24GA	304/316 .025 Sheet

Comment: Qty.: 0.7140 sf(s)/Unit Total : 1.4280 sf(s)
304/316 SS sheet 24 ga (0.025" thick)
Batch: M10S592 HB 07-10-9

CERTIFICATE OF CONFORMITY REQUIRED

2.0	WATER JET	FLOW WATER JET

Comment: FLOW WATER JET
1-Cut as per Dwg D3651
Dwg Rev: PRE HB 07-10-9
Prog Rev: PRE
2-Deburr if necessary HB 07-10-9

2

3.0	QC2	INSPECT PARTS AS THEY COME OFF MACHINE

HB 07-10-9

Comment: INSPECT PARTS AS THEY COME OFF MACHINE

4.0	QC8	SECOND CHECK

ENGINEERING APPROVAL

Comment: SECOND CHECK HB 07.10.10 EC 07/10/09

5.0	PACKAGING 1	PACKAGING RESOURCE #1

Comment: PACKAGING RESOURCE #1
Identify ~~and stock~~
Location:

FOR ENGINEERING USE ONLY

Form: rprocess

Date: Friday, 10/5/2007 8:03:38 AM
User: Eric Charbonneau

Process Sheet

Customer: CU-DAR001 Dart Helicopters Services **Drawing Name:** AFT BASE

Job Number: 35023 **Part Number:** D365113

Job Number:

Seq. #:	Machine Or Operation:	Description :
6.0	QC21	FINAL INSPECTION/W/O RELEASE

Comment: FINAL INSPECTION/W/O RELEASE 07/11/23

Job Completion

Form: rprocess

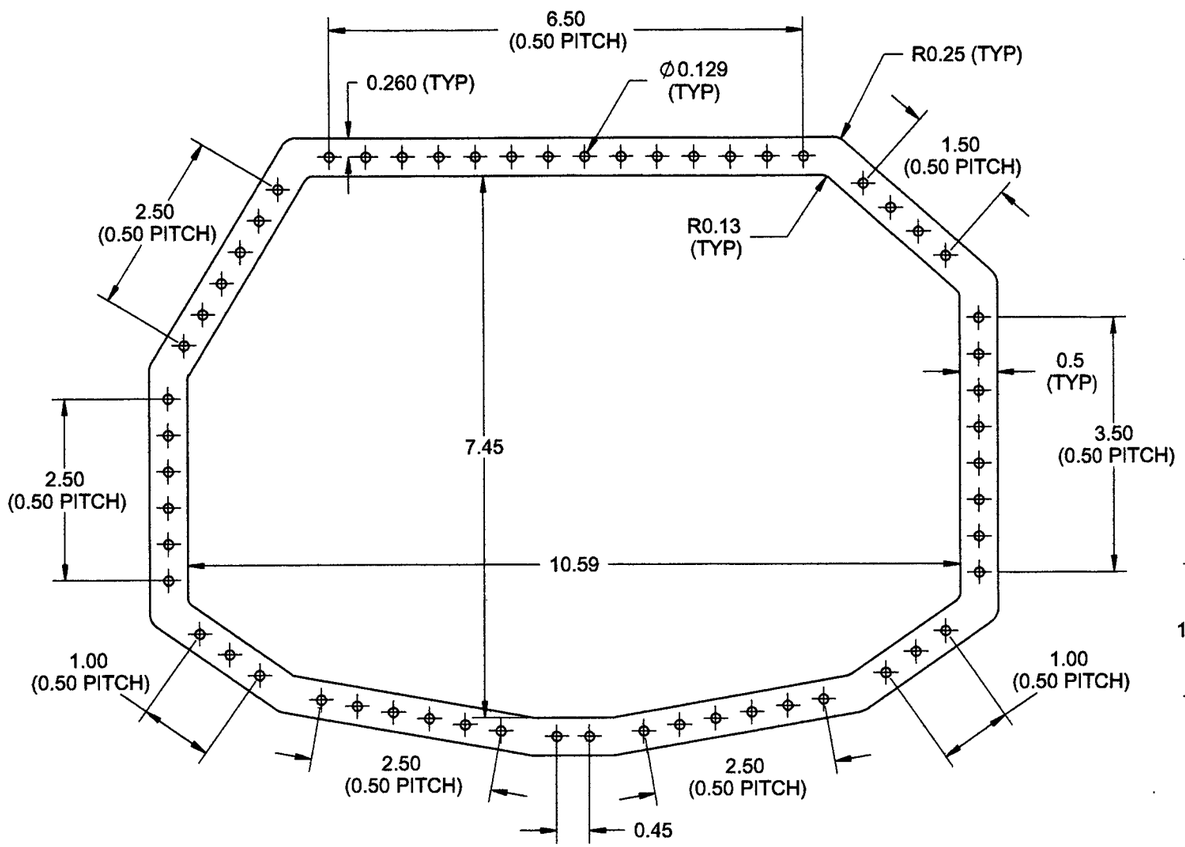

D3651-13 DOUBLER
DIMENSIONS BETWEEN HOLES ARE PROVIDED FOR REFERENCE ONLY
TRANSFER ∅0.129 HOLES FROM D3651-5/-7 WELDED

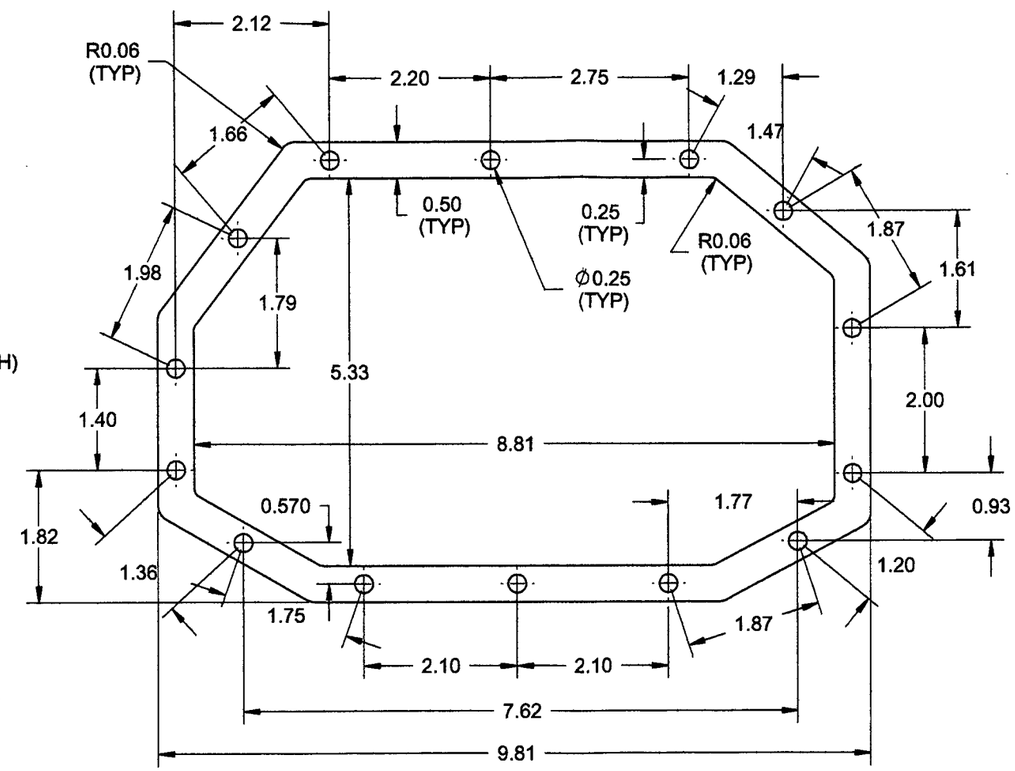

D3651-9 DOUBLER
DIMENSIONS BETWEEN HOLES ARE PROVIDED FOR REFERENCE ONLY
TRANSFER ∅0.250 HOLES FROM D3649-041/D3650-041 SECTION A-A

NOTES:

1) MATERIAL: AISI 304/316 STAINLESS STEEL 0.025 (24 GAUGE) SHEET, PER MIL-S-5019 (REF. DART SPEC. M304S24GA)
2) FINISH: NONE
3) TOLERANCES ARE PER DART QSI 018 UNLESS OTHERWISE NOTED
4) ALL DIMENSIONS ARE IN INCHES
5) BREAK ALL SHARP EDGES 0.005 TO 0.010
6) MACHINE PER DRAWING "D3651.A5"

DESIGN RF	DRAWN BY RF	**DART AEROSPACE LTD** HAWKESBURY, ONTARIO, CANADA
CHECKED DS	APPROVED	DRAWING NO. D3651 — REV. A — SHEET 5 OF 5
DATE 07.09.10		TITLE AFT BASE — SCALE 1:4

COPYRIGHT © 2007 BY DART AEROSPACE LTD.
THIS DOCUMENT IS PRIVATE AND CONFIDENTIAL AND IS SUPPLIED ON THE EXPRESS CONDITION THAT IT IS NOT TO BE USED FOR ANY PURPOSE OR COPIED OR COMMUNICATED TO ANY OTHER PERSON WITHOUT WRITTEN PERMISSION FROM DART AEROSPACE LTD.

DART AEROSPACE LTD	Work Order:	35023
Description: AFT BASE	Part Number:	D3651-13
Inspection Dwg: PRE Rev: PRE D3651		Page 1 of 1

FIRST ARTICLE INSPECTION CHECKLIST

[X] First Article [ ] Prototype

Drawing Dimension	Tolerance	Actual Dimension	Accept	Reject	Method of Inspection	Comments
Ø .129	+.005 -.001	.131	*			
6.50	+/- .030	6.50	*			
1.50	+/- .030	1.50	*			
3.50	+/- .030	3.50	*			
1.00	+/- .030	1.00	*			
2.50	+/- .030	2.50	*			
.45	+/- .030	.45	*			
2.50	+/- .030	2.50	*			
1.00	+/- .030	1.00	*			
2.50	+/- .030	2.50	*			
2.50	+/- .030	2.50	*			
.260	+/- .010	2.60	*			
7.45	+/- .030	7.45	*			
10.59	+/- .030	10.59	*			
.50	+/- .030	.52	*			

Measured by:	HB	Audited by:	CR	Prototype Approval:	
Date:	07-10-9	Date:	07/10/09	Date:	07.10.10

Rev	Date	Change	Revised by	Approved
A		New Issue	KJ/JLM	

Hawksbury, Ontario K6A 1K7
Phone: (613) 632-3336
Fax: (613) 632-4443

Purchase From:

Campi Steel
935 Boul. Du Havre
Valleyfield, QC J6S 5L1

Ship To:

Main Finished Goods Location
Dart Aerospace Ltd
1270 Aberdeen St
Hawksbury, Ontario K6A 1K7

Reference	Description	Contact	Vendor Number	PO Number
			VC-CAM002	PO00004550

Vendor Item Number	Item Number	Description	Qty. Received	UOM	Unit Cost	Extended Cost	Arrival Date
	M304S24GA	304/316 .025 Sheet PER MIL-S-5019 (ANNEALED) 2 B FINISH MATERIAL: AISI 304/316 SS SHEET B/N105592 .	96.0000	sf	5.600000	537.60	Sep 13, 2007

Comments:

-10004 BN104

Certificate of Mill Test Results
BL TO -003681-002 23Mar07
Pg 1/1

MILL TEST CERTIFICATE

YIEH MAU CORP.

INVOICE NO. : T0884648
COMMODITY : PRIME COLD ROLLED STAINLESS STEEL SHEET

Inox

SPECIFICATION : AISI 304,ASTM A240/A480
CUSTOMER :

24 Ja 48 x 96

ORIGINAL

NO. 5, SHUN AN RD. LIU CHU HSIANG
KAOHSIUNG TAIWAN R.O.C.
TEL:07/6972666 FAX:07/6979100
CERTIFICATE NO: T0884648
DATE OF ISSUE:07/01/2006

PAGE: 4

SIZE	NO.	Weight (N.W.) KGS	Weight (N.W.) LBS	Heat No.	ID NO.	Physical Properties Tensile Test (GL=50 m/m) Y.S. (N/mm²)	T.S. (N/mm²)	E.L. (%)	HRB	HV	Chemical Composition (%) C x100	Si x100	Mn x100	P x1000	S x1000	Ni x100	Cr x100	N x100
AISI 304/2B (WITH PAPER INTERLEAVED)																		
220A / 48" X 96"	1	1,402	3,091	TK404411	55972325B-1	287	650	56	80	156	4	34	121	27	1	807	1818	4.9
220A / 48" X 96"	1	1,402	3,091	TK404411	55972325B-4	287	650	56	80	156	4	34	121	27	1	807	1818	4.9
220A / 48" X 96"	1	1,404	3,095	TK404411	55972325B-8	287	650	56	80	156	4	34	121	27	1	807	1818	4.9
240A / 48" X 96"	1	1,518	3,347	TK404399	55972293B-02	288	671	57	80	156	4.2	33	127	25	1	803	1810	5
240A / 48" X 96"	2	1,517	3,344	TK404399	55972293B-22	288	671	57	80	156	4.2	33	127	25	1	803	1810	5
240A / 48" X 96"	1	1,476	3,254	TK404399	55972293B-34	288	671	57	80	156	4.2	33	127	25	1	803	1810	5
TOTAL:	8	8,718	19,218															

Remarks: NO MERCURY CONTAMINATION Bend test good for all Heat NO.

WE HEREBY CERTIFY THAT THE MATERIAL DESCRIBED HEREIN HAS BEEN MADE IN ACCORDANCE WITH THE RULES OF THE MILL CERTIFICATE.

YIEH MAU CORP.

Manager of Quality Assurance Section

2406 Indexed 14Sep06 by gaylam

Date: Friday, 10/5/2007 8:02:06 AM
User: Eric Charbonneau

Process Sheet

Customer	: CU-DAR001 Dart Helicopters Services	**Drawing Name**	: AFT BASE
Job Number	: 35021		**PROTOTYPE**
Estimate Number	: 13033		
P.O. Number	:	**Part Number**	: D36519
This Issue	: 10/5/2007 **S.O. No.** :	**Drawing Number**	: D3651 UNDER REVIEW
Prsht Rev.	: NC	**Project Number**	: N/A
First Issue	: / / **Type** : SMALL /MED FAB	**Drawing Revision**	: U/R **FOR ENGINEERING USE ONLY**
Previous Run	:	**Material**	:
Written By	:	**Due Date**	: 10/12/2007 **Qty:** 2 **Um:** Each
Checked & Approved By	:		
Comment	: Est Rev:A New Issue 07-09-27 DD verified by: EC		

Additional Product

Job Number:

Seq. #:	Machine Or Operation:	Description :
1.0	M304S24GA	304/316 .025 Sheet
	Comment: Qty.: 0.4526 sf(s)/Unit Total : 0.9051 sf(s) 304/316 SS sheet 24 ga (0.025" thick) Batch: 105592 HB 07-10-9	CERTIFICATE OF CONFORMITY REQUIRED
2.0	WATER JET	FLOW WATER JET
	Comment: FLOW WATER JET 1-Cut as per Dwg D3651 Dwg Rev: PRE Prog Rev: PRE HB 07-10-9 2-Deburr if necessary HB 07-10-9	2
3.0	QC2	INSPECT PARTS AS THEY COME OFF MACHINE
	HB 07-10-9	
	Comment: INSPECT PARTS AS THEY COME OFF MACHINE	
4.0	QC8	SECOND CHECK
		ENGINEERING APPROVAL
	Comment: SECOND CHECK	07.10.10 Em 07/10/05
5.0	PACKAGING 1	PACKAGING RESOURCE #1
	Comment: PACKAGING RESOURCE #1 Identify ~~and tag~~ Location:_____	**FOR ENGINEERING USE ONLY**

Date: Friday, 10/5/2007 8:02:06 AM
User: Eric Charbonneau

Process Sheet

Customer: CU-DAR001 Dart Helicopters Services **Drawing Name:** AFT BASE

Job Number: 35021 **Part Number:** D36519

Job Number:

Seq. #:	Machine Or Operation:	Description :
6.0	QC21	FINAL INSPECTION/W/O RELEASE

Comment: FINAL INSPECTION/W/O RELEASE D 07/11/27

Job Completion

Form: rprocess

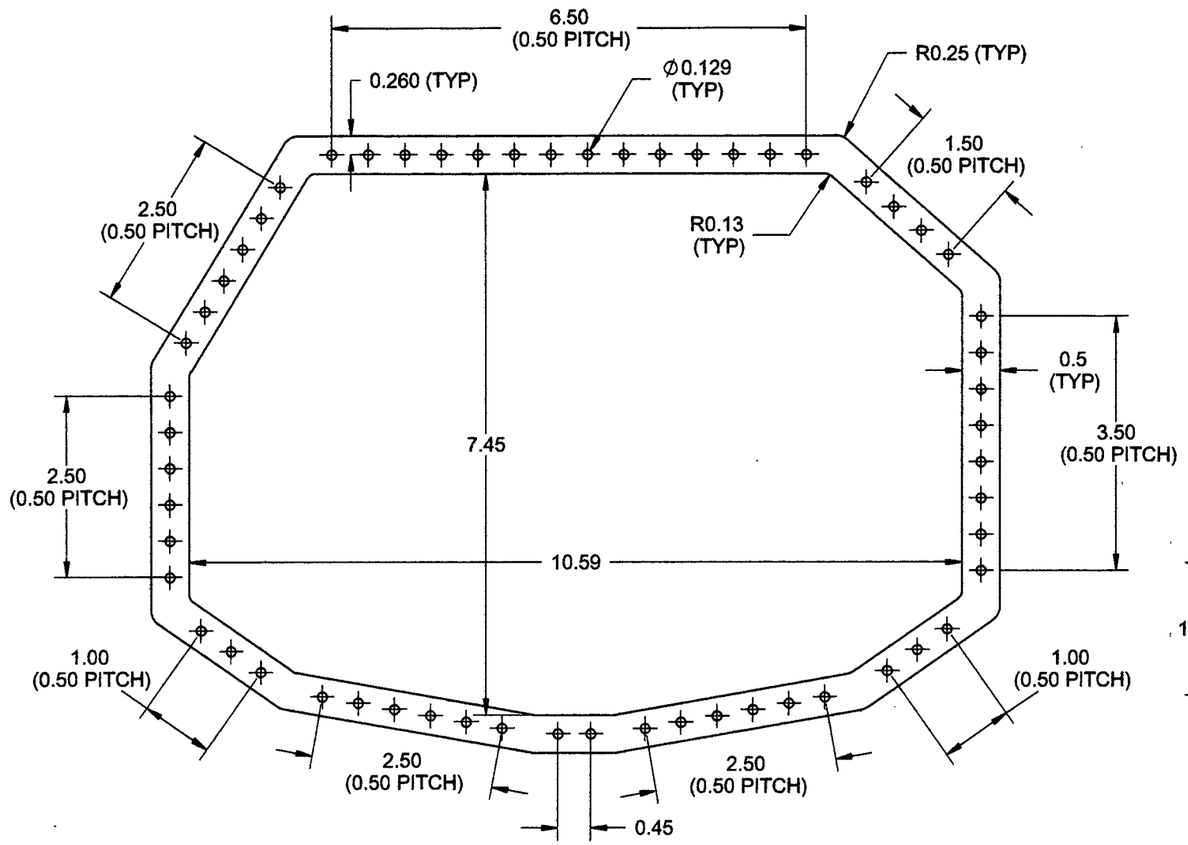

D3651-13 DOUBLER
DIMENSIONS BETWEEN HOLES ARE PROVIDED FOR REFERENCE ONLY
TRANSFER ∅0.129 HOLES FROM D3651-5/-7 WELDED

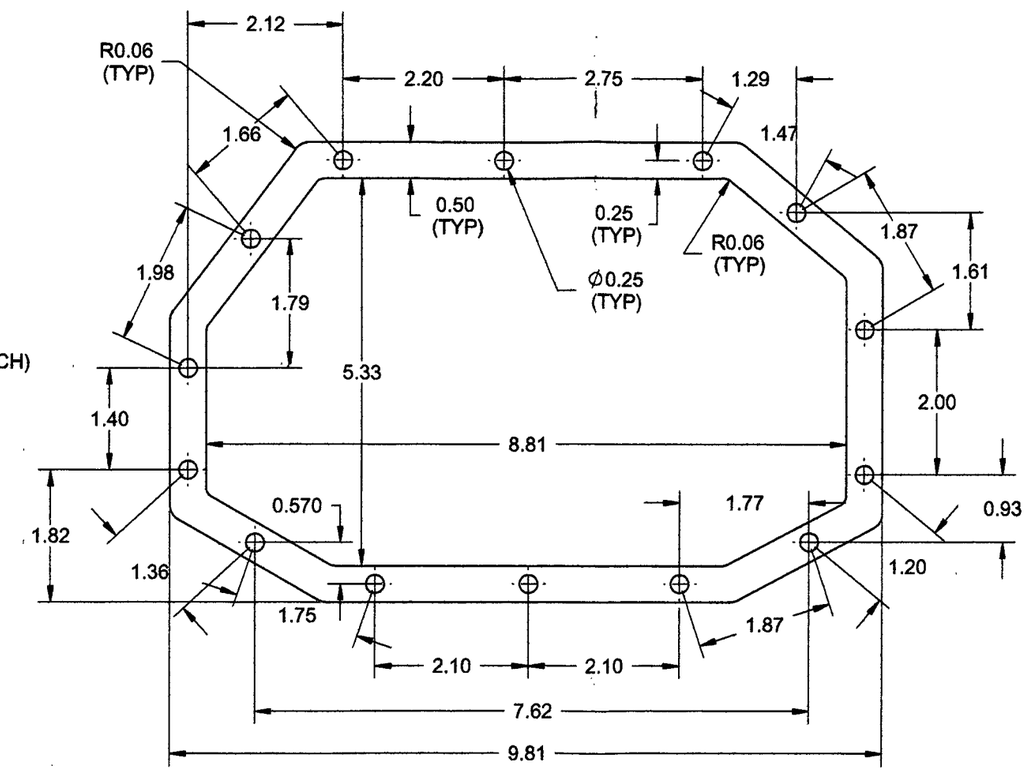

D3651-9 DOUBLER
DIMENSIONS BETWEEN HOLES ARE PROVIDED FOR REFERENCE ONLY
TRANSFER ∅0.250 HOLES FROM D3649-041/D3650-041 SECTION A-A

NOTES:

1) MATERIAL: AISI 304/316 STAINLESS STEEL 0.025 (24 GAUGE) SHEET, PER MIL-S-5019 (REF. DART SPEC. M304S24GA)
2) FINISH: NONE
3) TOLERANCES ARE PER DART QSI 018 UNLESS OTHERWISE NOTED
4) ALL DIMENSIONS ARE IN INCHES
5) BREAK ALL SHARP EDGES 0.005 TO 0.010
6) MACHINE PER DRAWING "D3651.A5"

DESIGN RF	DRAWN BY RF	**DART AEROSPACE LTD** HAWKESBURY, ONTARIO, CANADA
CHECKED DS	APPROVED	DRAWING NO. D3651 REV. A SHEET 5 OF 5
DATE 07.09.10		TITLE AFT BASE SCALE 1:4

COPYRIGHT © 2007 BY DART AEROSPACE LTD.
THIS DOCUMENT IS PRIVATE AND CONFIDENTIAL AND IS SUPPLIED ON THE EXPRESS CONDITION THAT IT IS NOT TO BE USED FOR ANY PURPOSE OR COPIED OR COMMUNICATED TO ANY OTHER PERSON WITHOUT WRITTEN PERMISSION FROM DART AEROSPACE LTD.

DART AEROSPACE LTD	Work Order:	35021
Description: AFT BASE	Part Number:	D3651-9
Inspection Dwg: 3651 Rev: PRE .L		Page 1 of 1

FIRST ARTICLE INSPECTION CHECKLIST

[X] First Article [ ] Prototype

Drawing Dimension	Tolerance	Actual Dimension	Accept	Reject	Method of Inspection	Comments
Ø .25	+.005 -.001	.251	X			
8.81	+/- .030	8.81	X			
9.81	+/- .030	9.81	X			
7.62	+/- .030	7.62	X			
2.10	+/- .030	2.10	X			
1.87	+/- .030	1.87	X			
2.00	+/- .030	2.00	X			
2.75	+/- .030	2.75	X			
2.20	+/- .030	2.20	X			
1.66	+/- .030	1.66	X			
1.98	+/- .030	1.98	X			
1.40	+/- .030	1.40	X			
1.36	+/- .030	1.36	X			
2.10	+/- .030	2.10	X			
.50	+/- .030	.50	X			
.25	+/- .030	.25	X			
5.33	+/- .030	5.328	X			
.025	+/- .030	.022	X			

Measured by:	FB	Audited by:		Prototype Approval:	
Date:	07-10-9	Date:	07/10/09	Date:	07.10.10

Rev	Date	Change	Revised by	Approved
A		New Issue	KJ/JLM	

Hawksbury, Ontario K6A 1K7
Phone: (613) 632-3336
Fax: (613) 632-4443

Purchase From:

Campi Steel
935 Boul. Du Havre
Valleyfield, QC J6S 5L1

Ship To:

Main Finished Goods Location
Dart Aerospace Ltd
1270 Aberdeen St
Hawksbury, Ontario K6A 1K7

Reference	Description	Contact	Vendor Number	PO Number
			VC-CAM002	PO00004550

Vendor Item Number	Item Number	Description	Qty. Received	UOM	Unit Cost	Extended Cost	Arrival Date
	M304S24GA	304/316 .025 Sheet PER MIL-S-5019 (ANNEALED) 2 B FINISH MATERIAL: AISI 304/316 SS SHEET B/N105592 .	96.0000	sf	5.600000	537.60	Sep 13, 2007

Comments:

-10004 BV104

Certificate of Mill Test Results
BL TO -003681-002 23Mar07
Pg 1/1

MILL TEST CERTIFICATE

YIEH MAU CORP.

INVOICE NO. : T0M8648
COMMODITY : PRIME COLD ROLLED STAINLESS STEEL SHEET

Inox

SPECIFICATION : AISI 304,ASTM A240/A480
CUSTOMER :

24 Ga 48 x 96

ORIGINAL

NO. 8,SHUN AN RD. LIU CHU HSIANG
KAOHSIUNG TAIWAN R.O.C.
TEL:(07)6978086 FAX:(07)6978066

CERTIFICATE NO: P0606646
DATE OF ISSUE:07/01/2006
PAGE: 4

SIZE	NO.	Weight (N.W.) KGS	Weight (N.W.) LBS	Heat No.	ID NO.	Physical Properties Tensile Test (G=50 m/m) Y.S. (N/mm²)	T.S. (N/mm²)	E.L. (%)	HRB	HV	Chemical Composition (%) C x100	Si x100	Mn x100	P x1000	S x1000	Ni x100	Cr x100	N x100
AISI 304/2B (WITH PAPER INTERLEAVED)																		
23GA / 48" X 96"	1	1,403	3,091	TK404411	55S7232GB-1	287	650	56	80	156	4	34	121	27	1	807	1818	4.9
23GA / 48" X 96"	1	1,402	3,090	TK404411	55S7232GB-2	287	650	56	80	156	4	34	121	27	1	807	1818	4.9
23GA / 48" X 96"	1	1,404	3,095	TK404411	55S7232GB-3	287	650	56	80	156	4	34	121	27	1	807	1818	4.9
24GA / 48" X 96"	1	1,518	3,347	TK404399	55S7232GB-22	288	671	57	80	156	4.2	33	127	25	1	803	1810	5
24GA / 48" X 96"	2	1,617	3,564	TK404399	55S7232GB-23	288	671	57	80	156	4.2	33	127	25	1	803	1810	5
24GA / 48" X 96"	1	1,476	3,254	TK404399	55S7232GB-24	288	671	57	80	156	4.2	33	127	25	1	803	1810	5
TOTAL:	8	8,719	19,303															

Remarks: NO MERCURY CONTAMINATION

Bend test good for all Heat NO.

WE HEREBY CERTIFY THAT THE MATERIAL DESCRIBED HEREIN HAS BEEN MADE IN ACCORDANCE WITH THE RULES OF THE MILL CERTIFICATE.

YIEH MAU CORP.

Manager of Quality Assurance Section

.2006 Indexed 14Sep06 by gaylam

Dart Aerospace Ltd.

Date: Monday, 10/29/2007 10:05:41 AM
User: Eric Charbonneau

Process Sheet

Customer	: CU-DAR001 Dart Helicopters Services	**Drawing Name**	: DOUBLER
Job Number	: 35412		
Estimate Number	: 13055		
P.O. Number	:	**Part Number**	: D36541
This Issue	: 10/29/2007 **S.O. No.** :	**Drawing Number**	: D3654 UNDER REVIEW
Prsht Rev.	: NC	**Project Number**	: N/A
First Issue	: / / **Type** : SMALL /MED FAB	**Drawing Revision**	: U/R
Previous Run	:	**Material**	:
Written By	: EC	**Due Date**	: 11/5/2007 **Qty:** 1 **Um:** Each
Checked & Approved By	:		
Comment	: Est Rev:A New Issue 07-10-29 DD verified by: EC		

PROTOTYPE

FOR ENGINEERING USE ONLY

Additional Product

Job Number:

Seq. #:	Machine Or Operation:	Description :
1.0	M304S16GA	304/316 .063 Sheet

Comment: Qty.: 0.3675 sf(s)/Unit Total : 0.3675 sf(s)
304/316 SS sheet 16 ga (0.063" thick)
Batch: M10S 130 HB07-10-29

CERTIFICATE OF CONFORMITY REQUIRED

2.0	WATER JET	FLOW WATER JET

Comment: FLOW WATER JET
1-Cut as per Dwg D3654
Dwg Rev: PRE. L. HB07-10-29
Prog Rev: PRE. L.

2-Deburr if necessary HB07-10-29

1

3.0	QC2	INSPECT PARTS AS THEY COME OFF MACHINE

HB07-10-29

Comment: INSPECT PARTS AS THEY COME OFF MACHINE

4.0	QC8	SECOND CHECK

ENGINEERING APPROVAL

07.10.30

Comment: SECOND CHECK

5.0	PACKAGING 1	PACKAGING RESOURCE #1

Comment: PACKAGING RESOURCE #1
Identify ~~and stock~~
Location:_____

EC 07.10.30

FOR ENGINEERING USE ONLY

Form: rprocess

Date: Monday, 10/29/2007 10:05:41 AM
User: Eric Charbonneau

Process Sheet

Customer: CU-DAR001 Dart Helicopters Services **Drawing Name:** DOUBLER

Job Number: 35412 **Part Number:** D36541

Job Number:

Seq. #:	Machine Or Operation:	Description :
6.0	QC21	FINAL INSPECTION/W/O RELEASE

Comment: FINAL INSPECTION/W/O RELEASE 07/11/27

Job Completion

Form: rprocess

PRELIMINARY ISSUE

PROTOTYPE

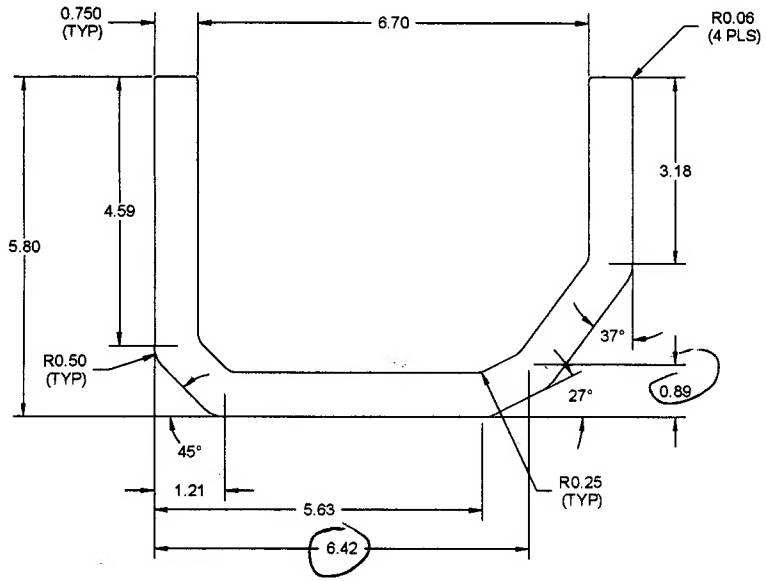

D3654-1 DOUBLER

NOTES:
1) MATERIAL: AISI 304/316 SAINLESS STEEL 0.063 (16 GAUGE) SHEET, PER MIL-S-5019
(REF. DART SPEC. M304S22GA)
2) FINISH: NONE
3) TOLERANCES: PER DART QSI 018 UNLESS OTHERWISE NOTED
4) UNITS: INCHES UNLESS OTHERWISE NOTED
5) BREAK SHARP EDGES: 0.005 TO 0.010 MAX
6) IDENTIFICATION: IDENTIFY WITH DART P/N D3654-1 USING FINE POINT PERMANENT INK MARKER
7) WEIGHT: 0.03 lbs

REV.	DESCRIPTION	BY	DATE
A	NEW ISSUE	RF	07.10.04

DESIGN	RF	DART AEROSPACE LTD HAWKESBURY, ONTARIO, CANADA	
DRAWN	RF		
CHECKED		DRAWING NO. D3654	REV. A SHEET 1 OF 1
MFG. APPR.			
APPROVED		TITLE DOUBLER	SCALE 1:2
DE APPR.			
DATE	07.10.04		

COPYRIGHT © 2007 BY DART AEROSPACE LTD
THIS DOCUMENT IS PRIVATE AND CONFIDENTIAL AND IS SUPPLIED ON THE EXPRESS CONDITION THAT IT IS NOT TO BE USED FOR ANY PURPOSE OR COPIED OR COMMUNICATED TO ANY OTHER PERSON WITHOUT WRITTEN PERMISSION FROM DART AEROSPACE LTD.

DART AEROSPACE LTD	Work Order:	35412
Description: Doubler	Part Number:	D3654-1
Inspection Dwg: D3654-1 Rev: PRE. L.		Page 1 of 1

FIRST ARTICLE INSPECTION CHECKLIST

[X] First Article [ ] Prototype

Drawing Dimension	Tolerance	Actual Dimension	Accept	Reject	Method of Inspection	Comments
6.70	+/- .030	6.70	✓			
3.18	+/- .030	3.18	✓			
~~.89~~	~~+/- .030~~	N/A				
.750	+/- .010	.754	✓			
5.80	+/- .030	5.80	✓			
4.59	+/- .030	4.59	✓			
1.21	+/- .030	1.21	✓			
5.63	+/- .030	5.63	✓			
~~6.42~~	~~+/- .030~~	N/A				

Measured by:	BB	Audited by:		Prototype Approval:	
Date:	07-10-29	Date:	07/10/30	Date:	07.10.30

Rev	Date	Change	Revised by	Approved
A		New Issue	KJ/JLM	